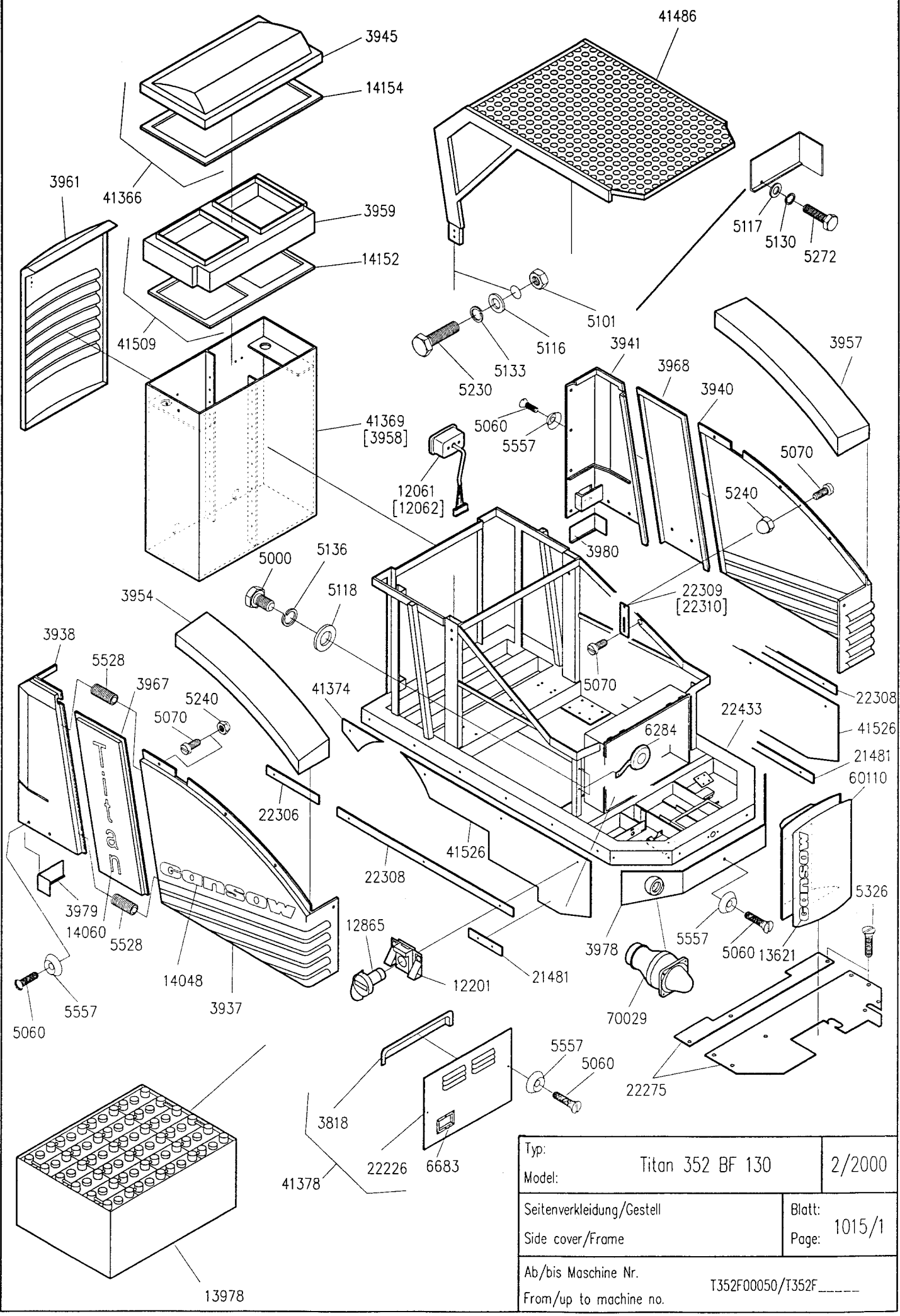
3945
14154
41486
3961
41366
3959
14152
5117
5130
5272
41509
5101
5116
5133
5230
3941
3968
3940
3957
41369
[3958]
5060
5557
12061
[12062]
5070
5240
3980
5000
5136
5118
22309
[22310]
3954
3938
5528
3967
5240
5070
41374
5070
22308
22433
41526
6284
21481
60110
22306
41526
22308
5326
3979
14060
5528
14048
3937
12865
12201
21481
3978
5557
5060
13621
70029
5557
5060
5557
5060
22275
3818
22226
6683
41378
13978
Typ:
Model:
Titan 352 BF 130
2/2000
Seitenverkleidung/Gestell
Side cover/Frame
Blatt:
Page:
1015/1
Ab/bis Maschine Nr.
From/up to machine no.
T352F00050/T352F_____

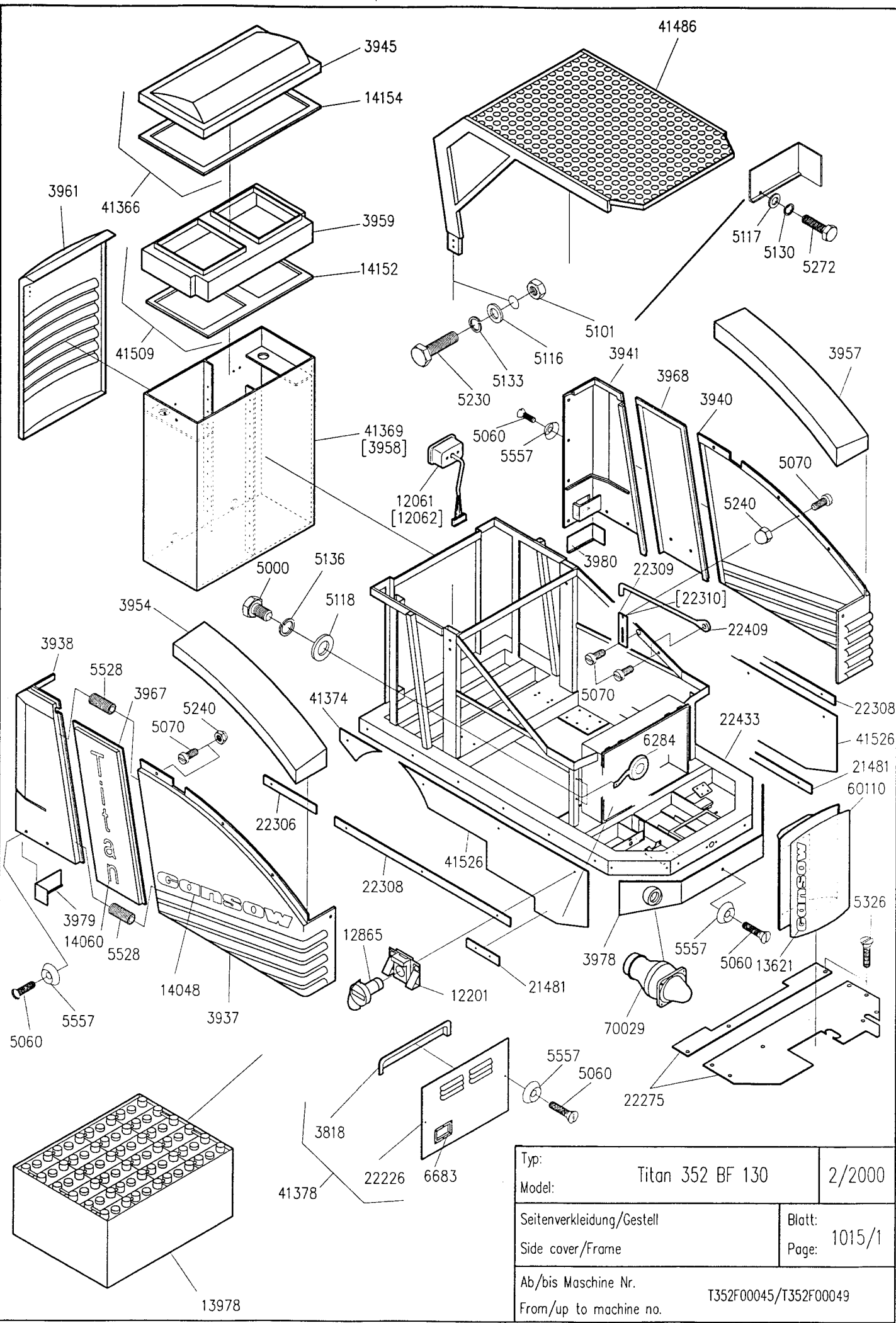
3945
14154
41486
3961
41366
3959
14152
5117
5130
5272
41509
5101
5116
5133
5230
3941
3968
3940
3957
41369
[3958]
5060
5557
12061
[12062]
5070
5240
3980
22309
[22310]
22409
5000
5136
5118
3954
3938
5528
3967
5240
5070
41374
5070
22308
22433
41526
6284
21481
60110
22306
41526
22308
5326
3979
14060
5528
12865
3978
5557
5060
13621
14048
12201
21481
5557
3937
70029
5060
5557
5060
22275
3818
22226
6683
41378
13978
Typ:
Model:
Titan 352 BF 130
2/2000
Seitenverkleidung/Gestell
Side cover/Frame
Blatt:
Page:
1015/1
Ab/bis Maschine Nr.
From/up to machine no.
T352F00045/T352F00049

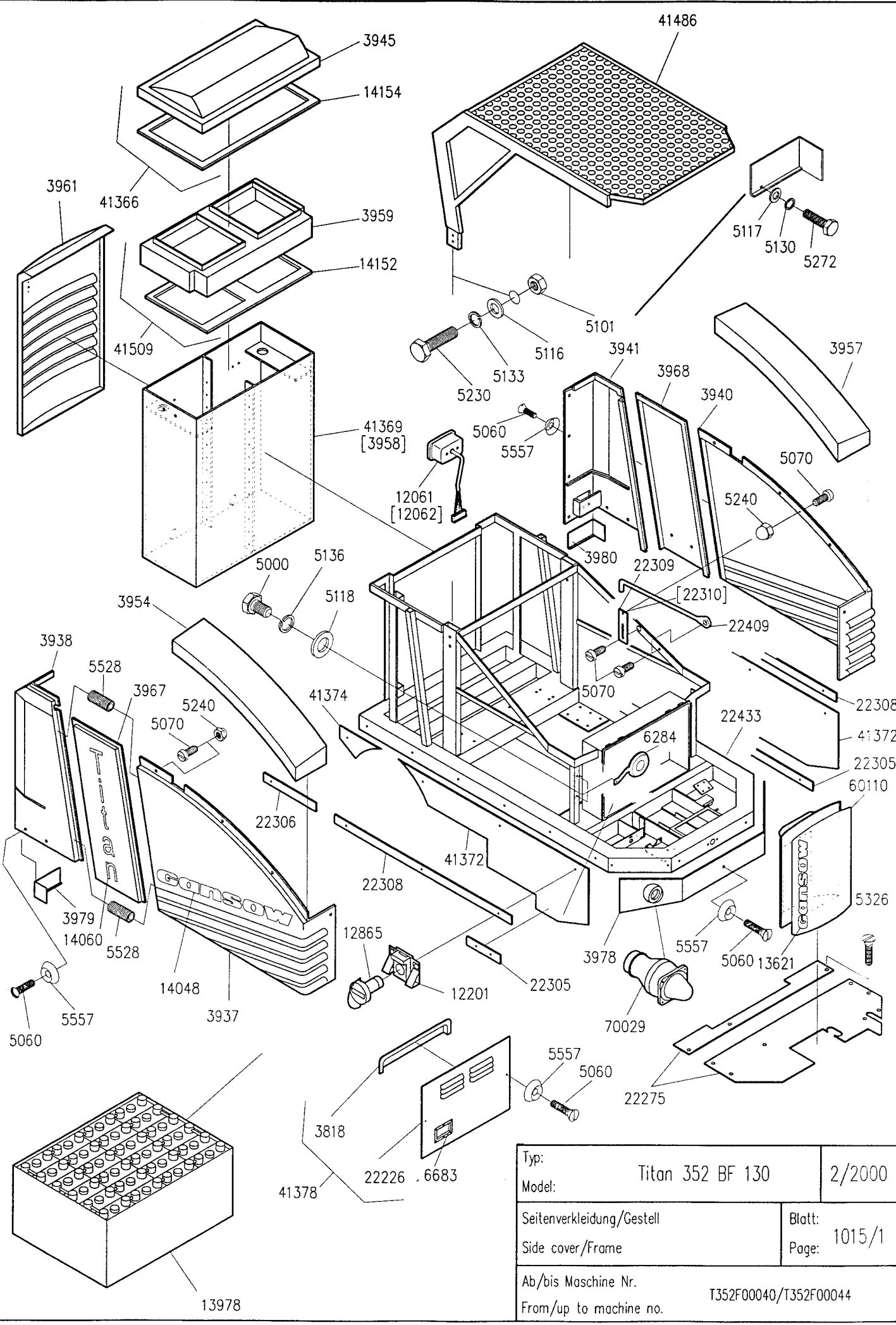

Typ: Model:	Titan 352 BF 130	2/2000
Seitenverkleidung/Gestell Side cover/Frame		Blatt: Page: 1015/1
Ab/bis Maschine Nr. From/up to machine no.	T352F00040/T352F00044	

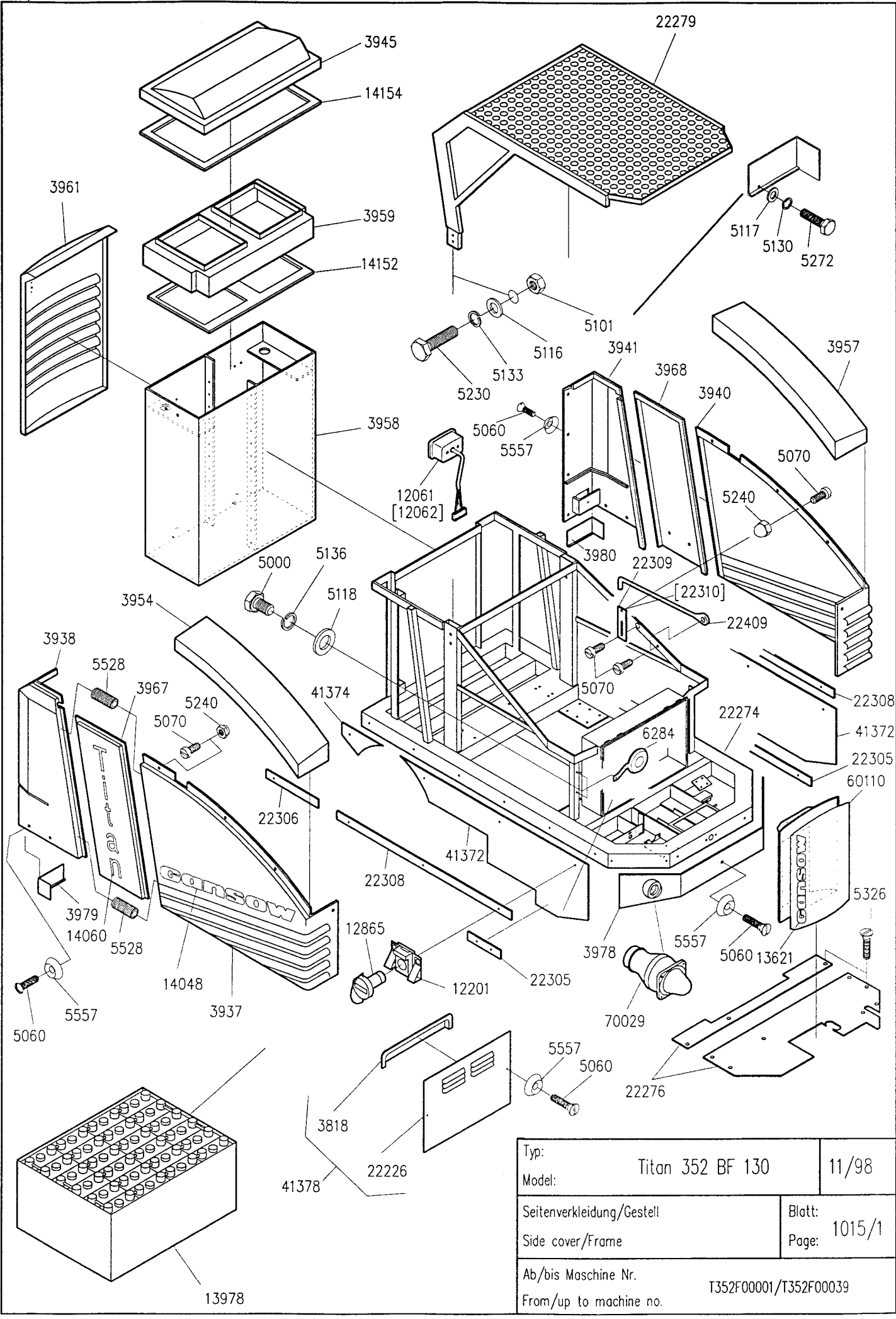

Typ: Model:	Titan 352 BF 130	11/98
Seitenverkleidung/Gestell Side cover/Frame		Blatt: Page: 1015/1
Ab/bis Maschine Nr. From/up to machine no.	T352F00001/T352F00039	

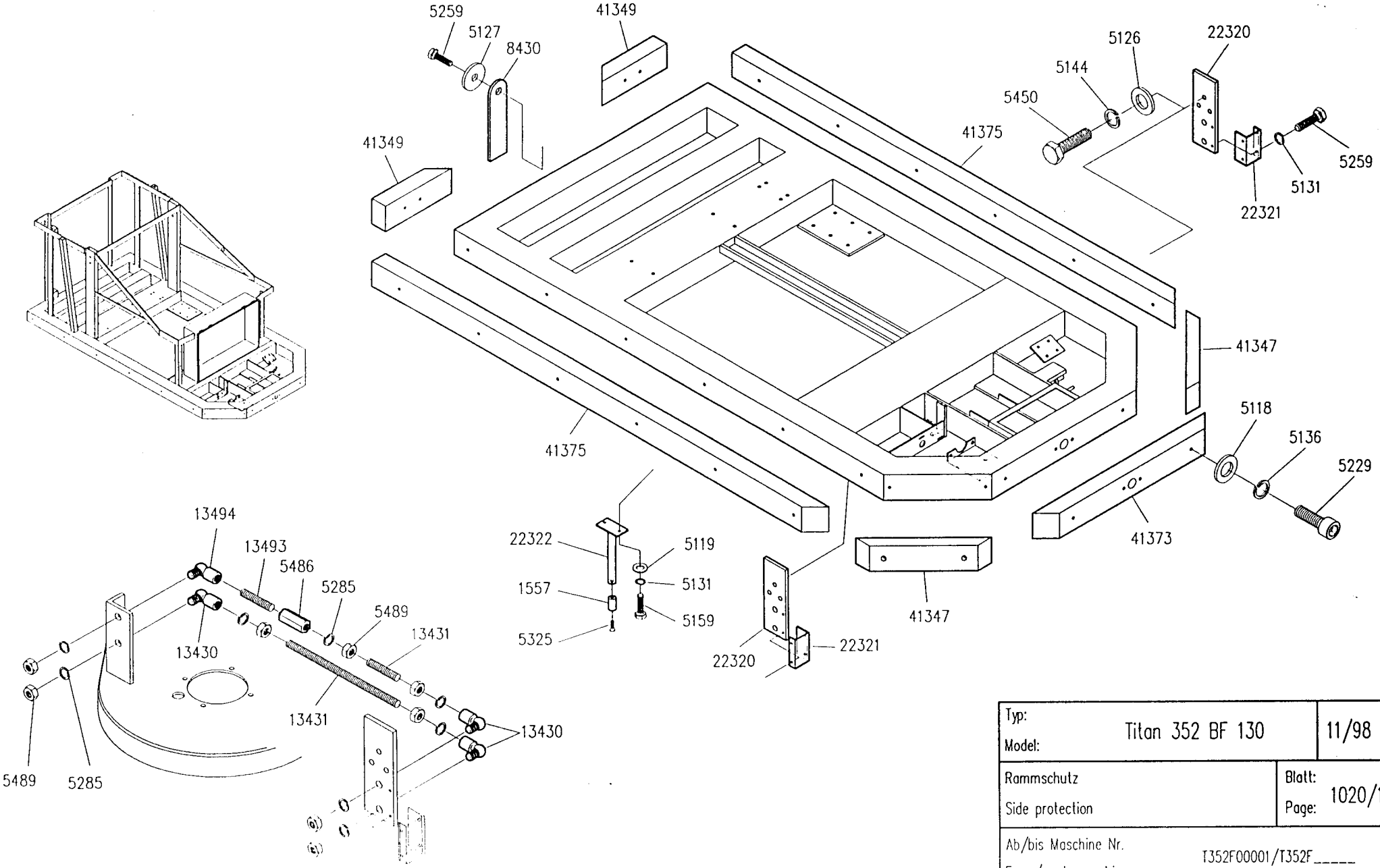

Typ: Model:	Titan 352 BF 130	11/98
Rammschutz Side protection	Blatt: Page:	1020/1
Ab/bis Maschine Nr. From/up to machine no.	T352F00001/T352F_____	

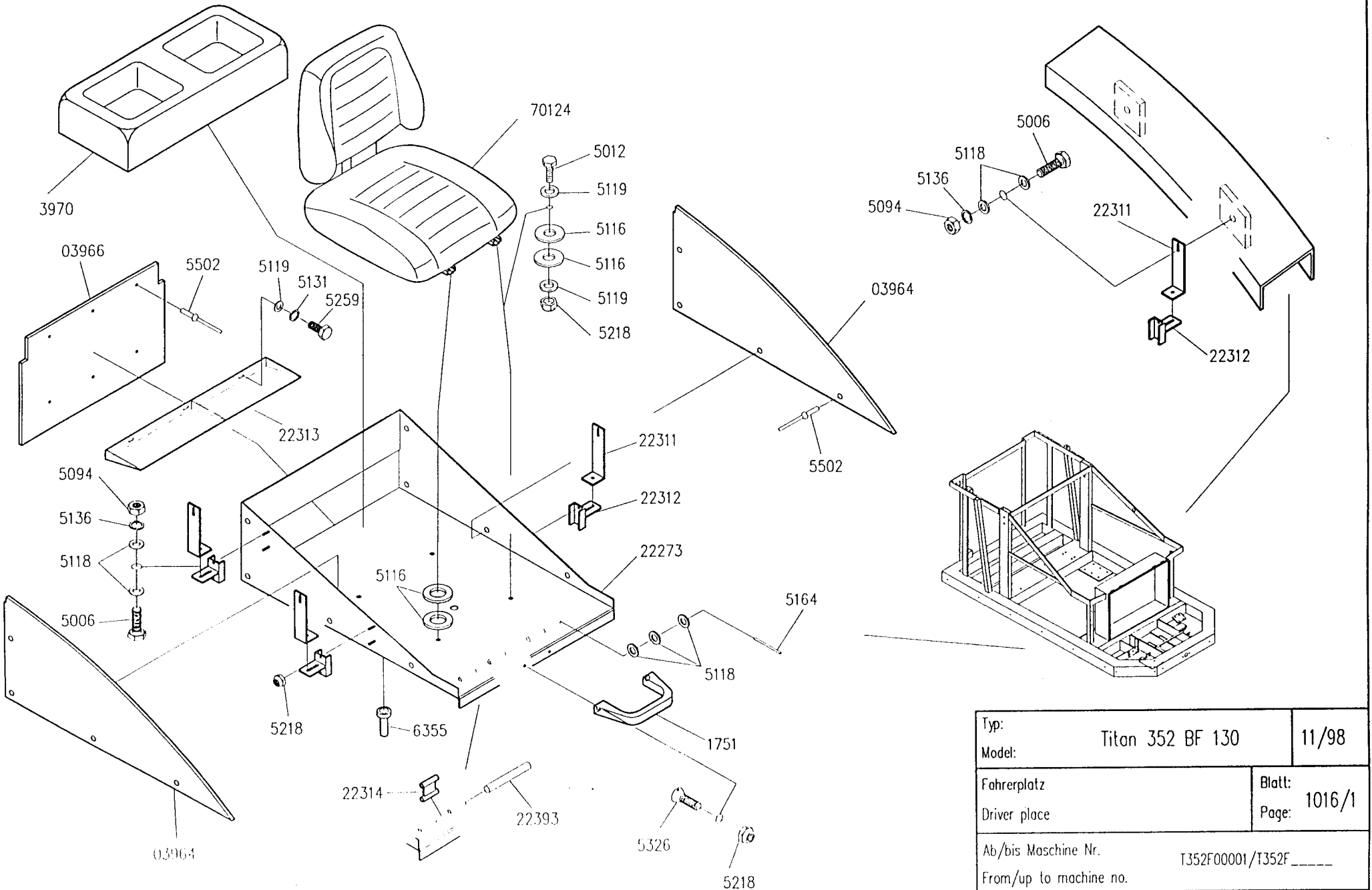

Typ: Model:	Titan 352 BF 130	11/98
Fahrerplatz Driver place		Blatt: Page: 1016/1
Ab/bis Maschine Nr. From/up to machine no.	T352F00001/T352F_____	

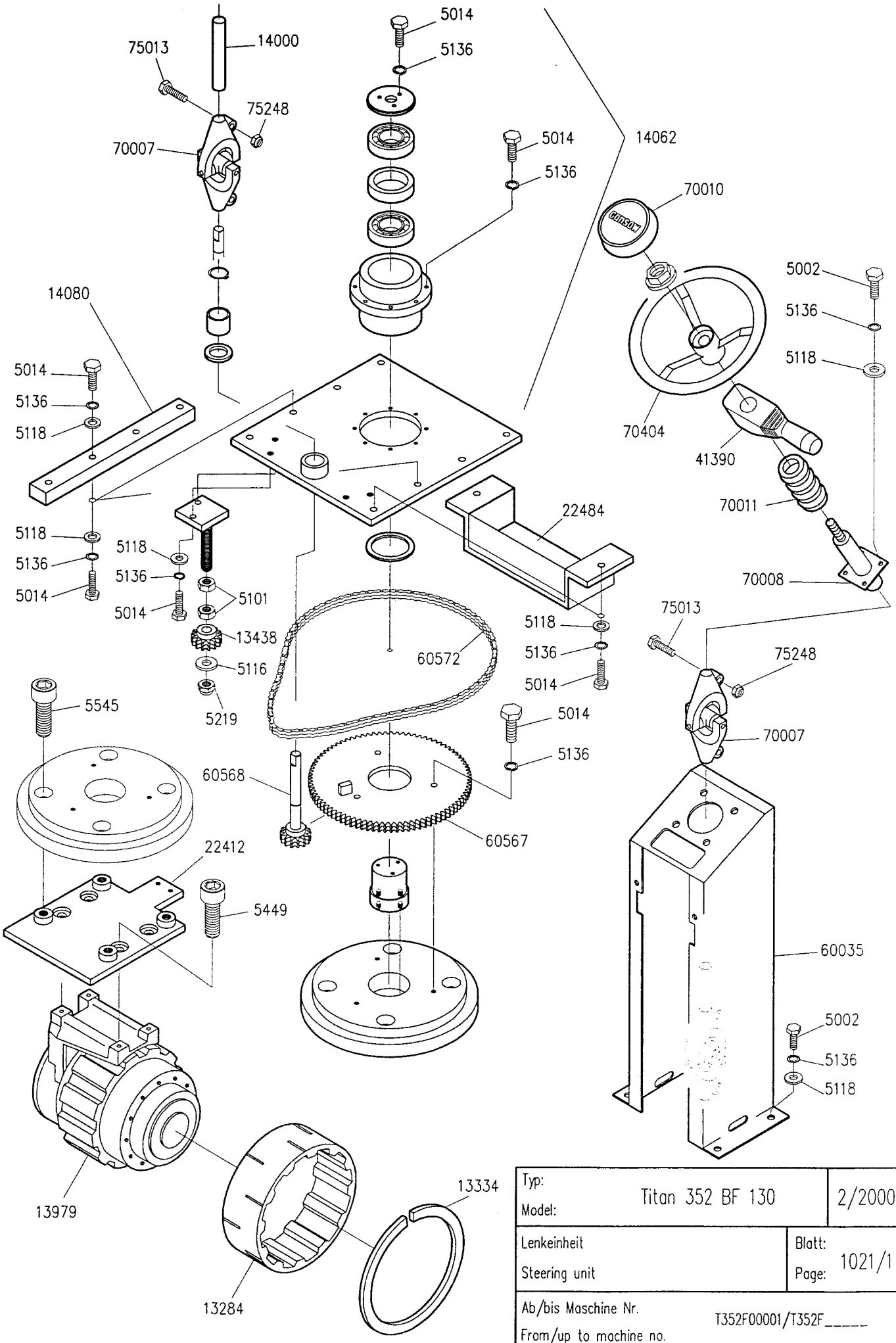

Typ: Model:	Titan 352 BF 130	2/2000
Lenkeinheit Steering unit		Blatt: Page: 1021/1
Ab/bis Maschine Nr. From/up to machine no.	T352F00001/T352F_____	

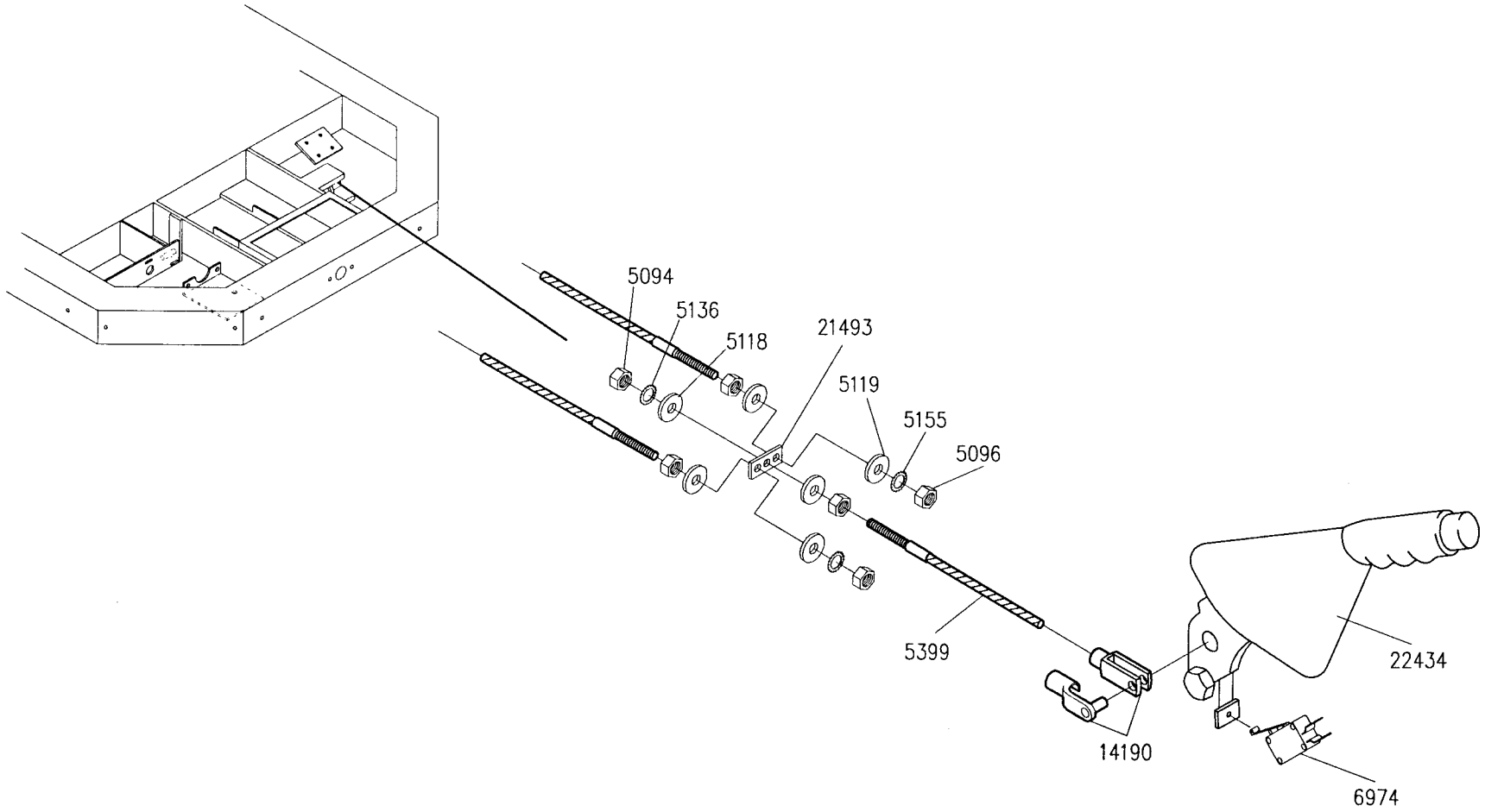

Typ: Model:	Titan 352 BF 130	2/2000
Feststellbremse Parking brake	Blatt: Page:	1023/1
Ab/bis Maschine Nr. From/up to machine no.	T352F00040/T352F_____	

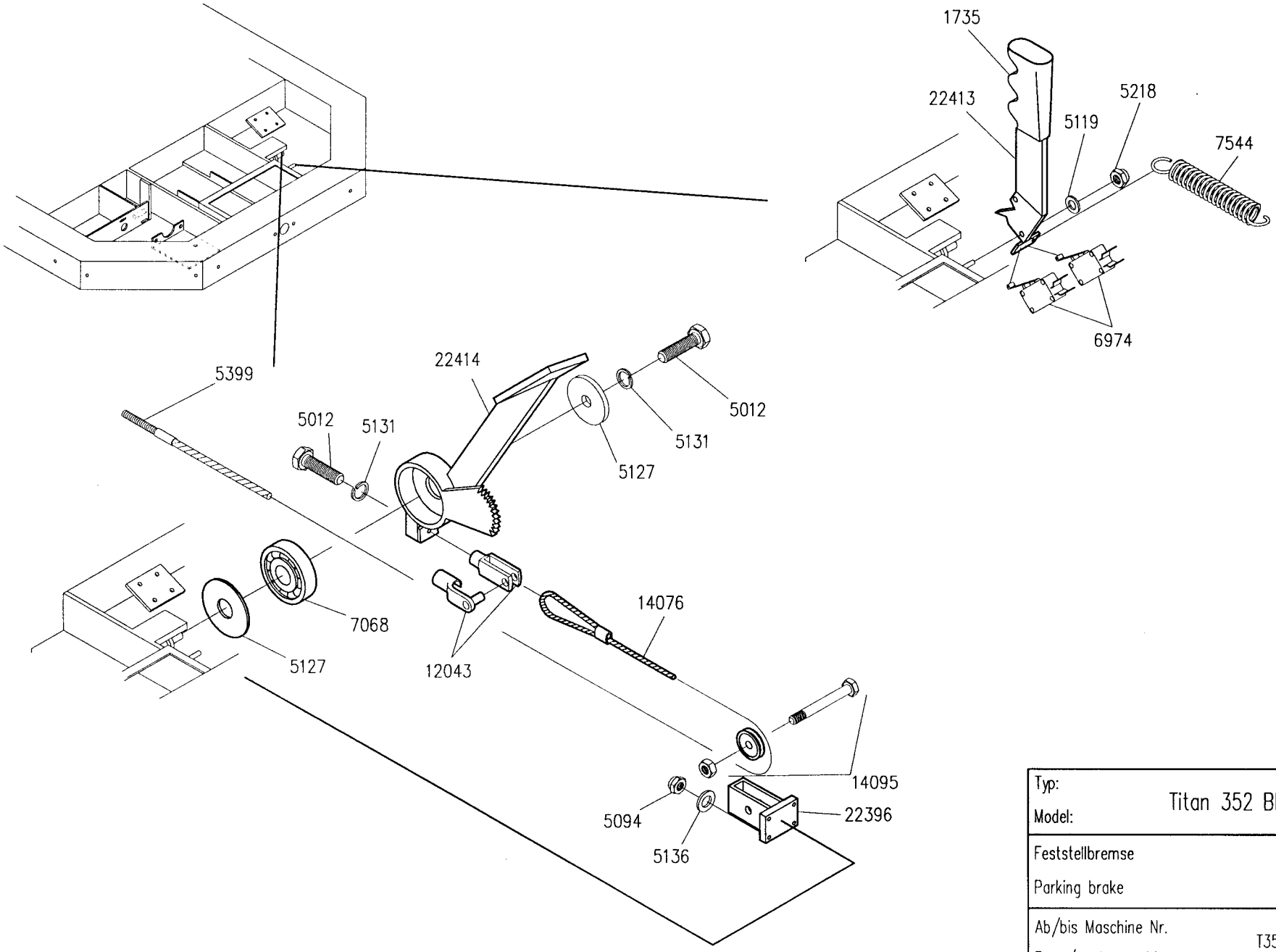

Typ: Model:	Titan 352 BF 130	11/98
Feststellbremse Parking brake	Blatt: Page:	1023/1
Ab/bis Maschine Nr. From/up to machine no.	T352F00001/T352F00039	

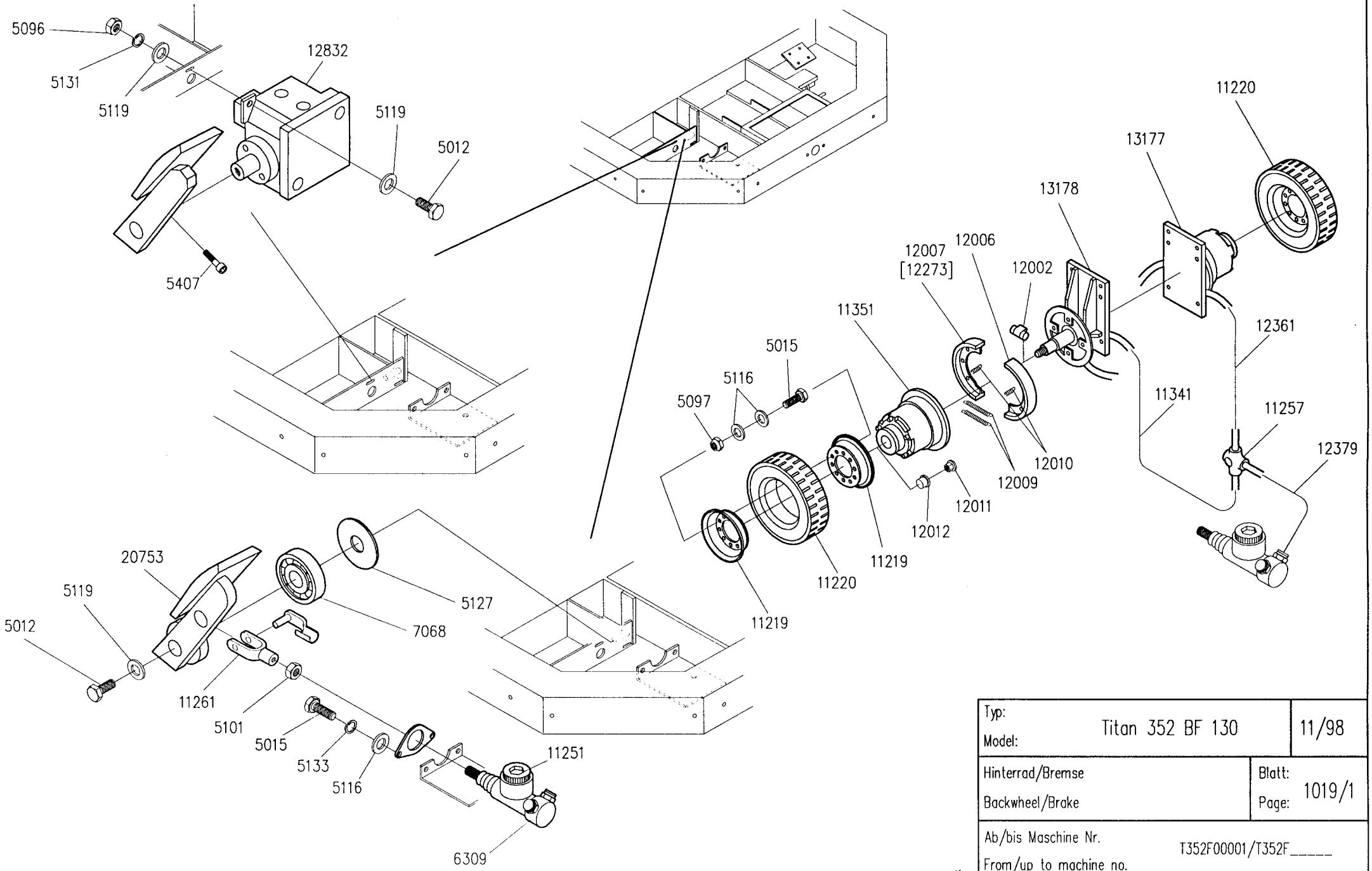

Typ: Model:	Titan 352 BF 130	11/98
Hinterrad/Bremse Backwheel/Brake	Blatt: Page:	1019/1
Ab/bis Maschine Nr. From/up to machine no.	T352F00001/T352F_____	

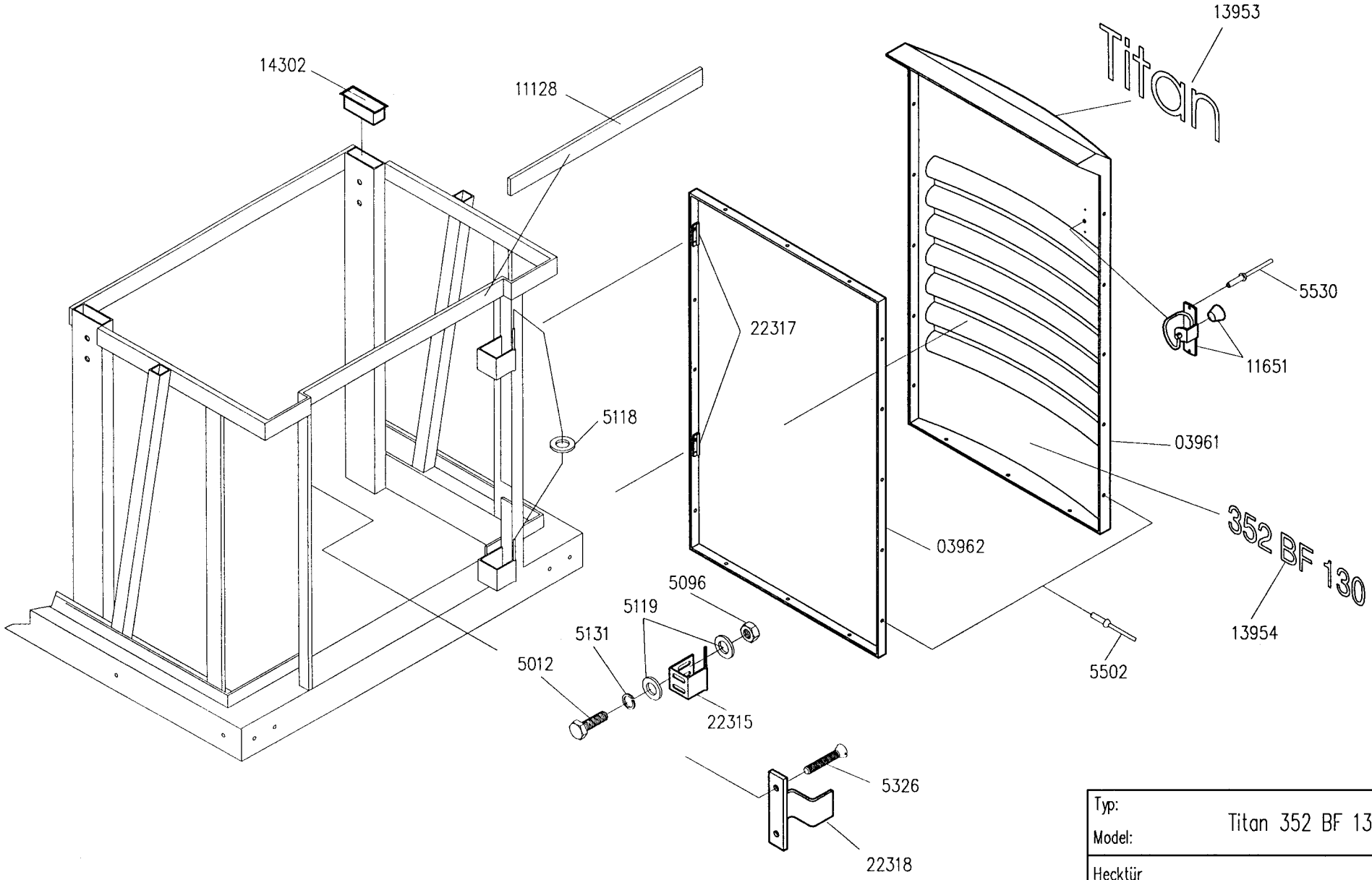

Typ: Model:	Titan 352 BF 130	2/2000
Hecktür Rear door		Blatt: Page: 1018/1
Ab/bis Maschine Nr. From/up to machine no.	T352F00040/T352F_____	

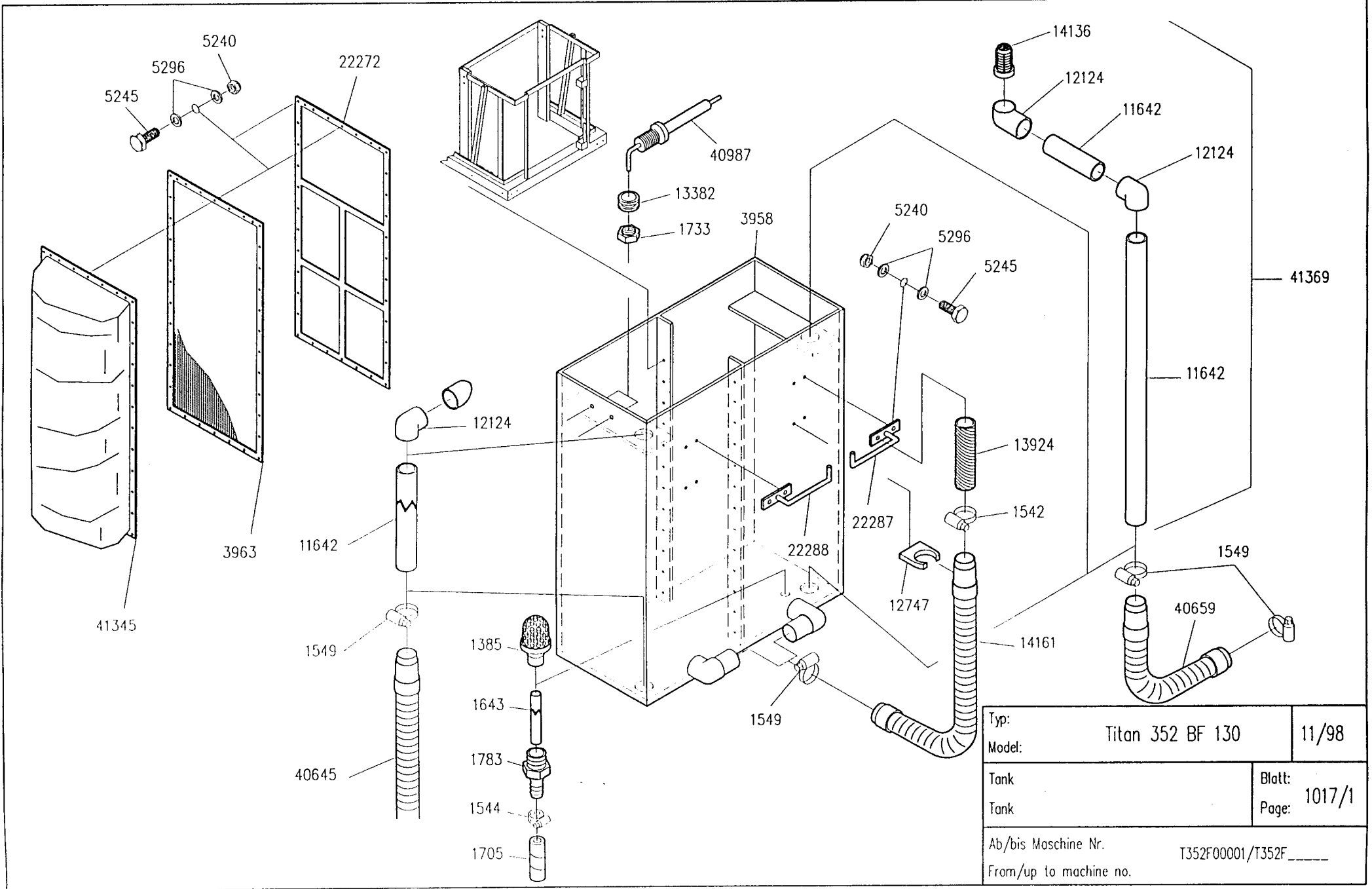
5240
5296
5245
22272
40987
13382
1733
3958
14136
12124
11642
12124
41369
5240
5296
5245
11642
12124
13924
1542
22287
22288
12747
1549
40659
14161
1549
3963
11642
41345
1549
1385
1643
1783
1544
1705
40645
Typ:
Model:
Titan 352 BF 130
11/98
Tank
Tank
Blatt:
Page:
1017/1
Ab/bis Maschine Nr.
From/up to machine no.
T352F00001/T352F_____

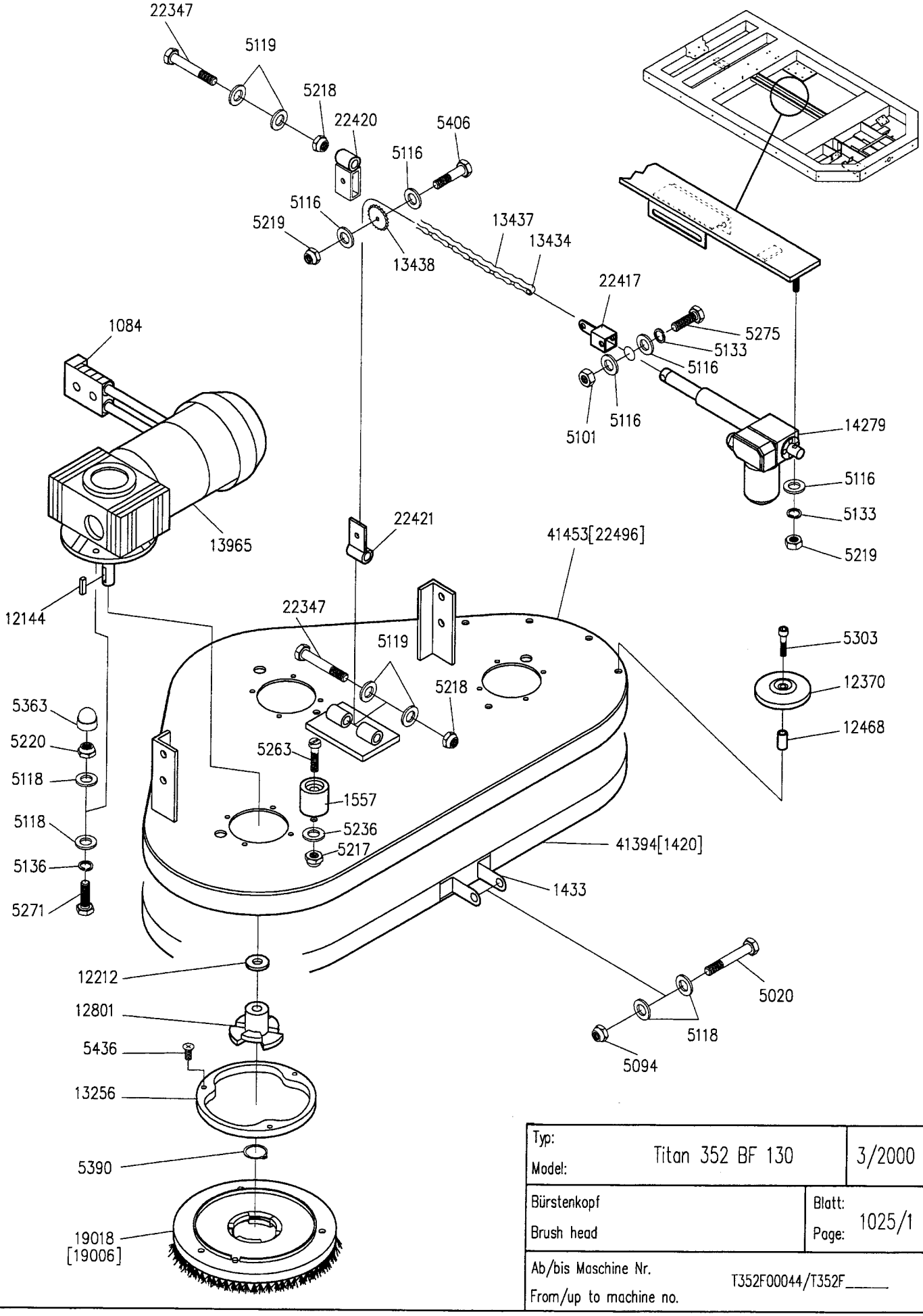

Typ: Model:	Titan 352 BF 130	3/2000
Bürstenkopf Brush head	Blatt: Page:	1025/1
Ab/bis Maschine Nr. From/up to machine no.	T352F00044/T352F_____	

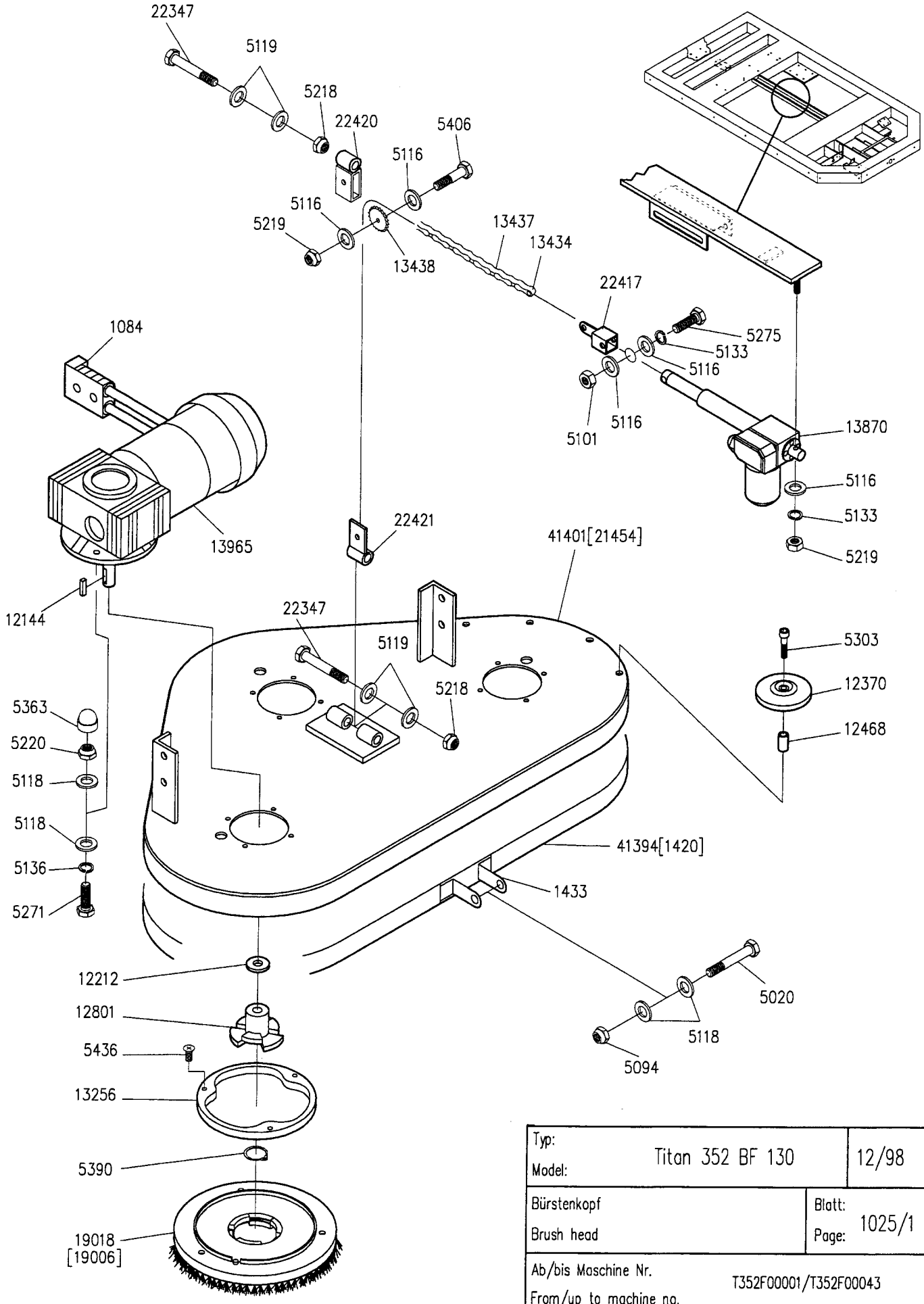

Typ: Model:	Titan 352 BF 130	12/98
Bürstenkopf Brush head	Blatt: Page:	1025/1
Ab/bis Maschine Nr. From/up to machine no.	T352F00001/T352F00043	

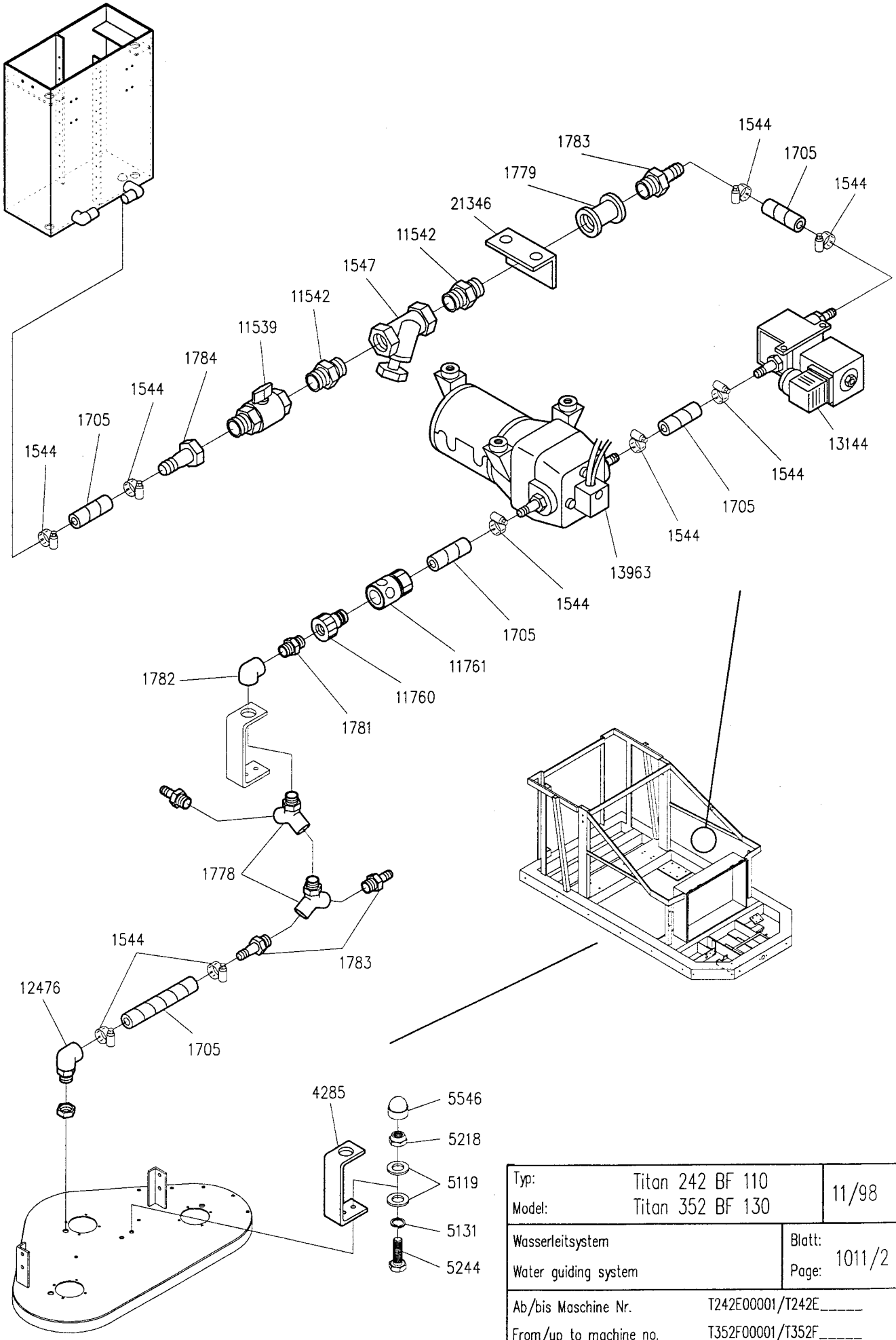

Typ: / Model:	Titan 242 BF 110 / Titan 352 BF 130	11/98
Wasserleitsystem / Water guiding system		Blatt: / Page: 1011/2
Ab/bis Maschine Nr. / From/up to machine no.	T242E00001/T242E_____ / T352F00001/T352F_____	

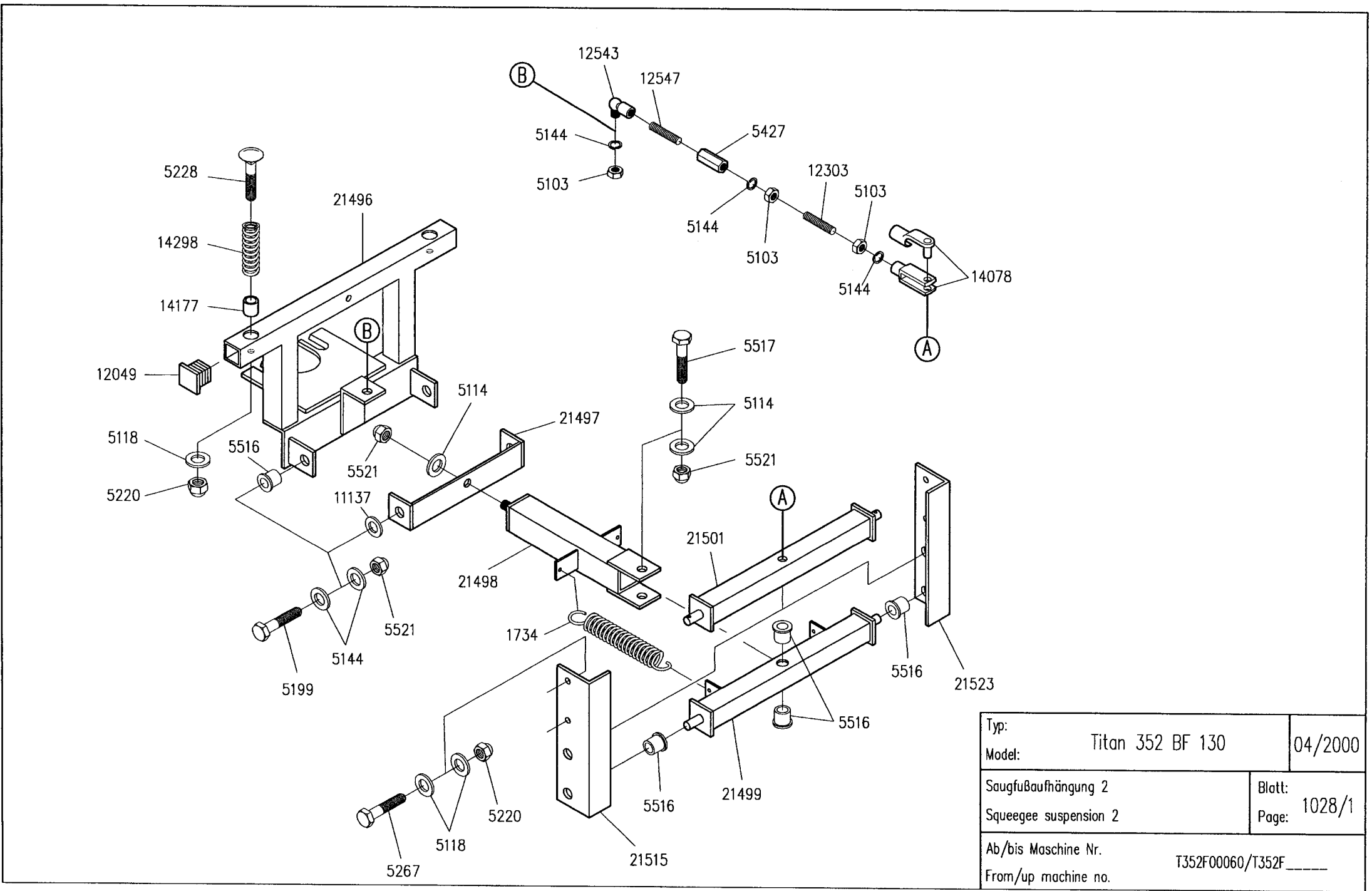

Typ: Model:	Titan 352 BF 130	04/2000
Saugfußaufhängung 2 Squeegee suspension 2	Blatt: Page:	1028/1
Ab/bis Maschine Nr. From/up machine no.	T352F00060/T352F_____	

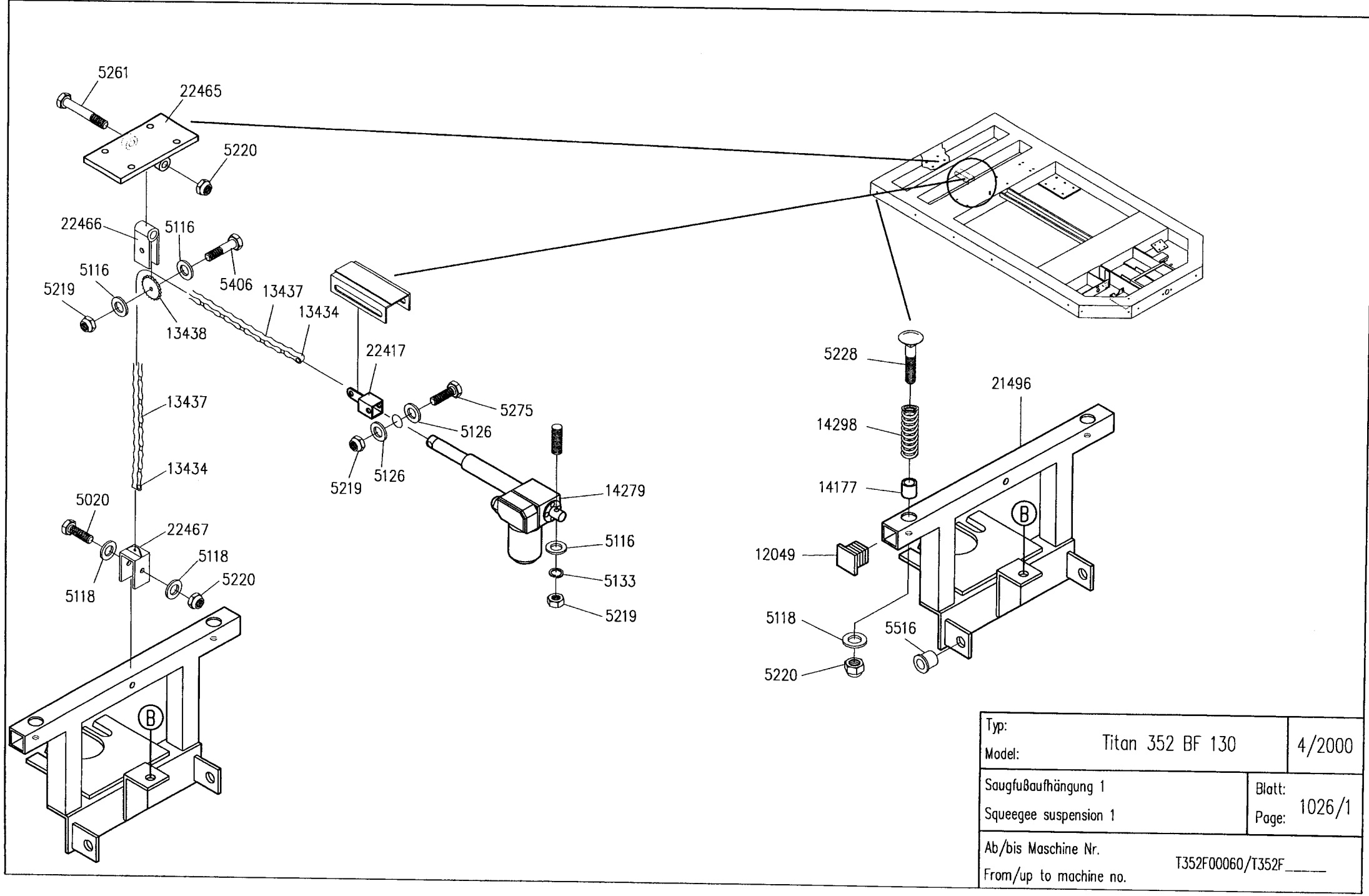

Typ: Model:	Titan 352 BF 130	4/2000
Saugfußaufhängung 1 Squeegee suspension 1	Blatt: Page:	1026/1
Ab/bis Maschine Nr. From/up to machine no.	T352F00060/T352F_____	

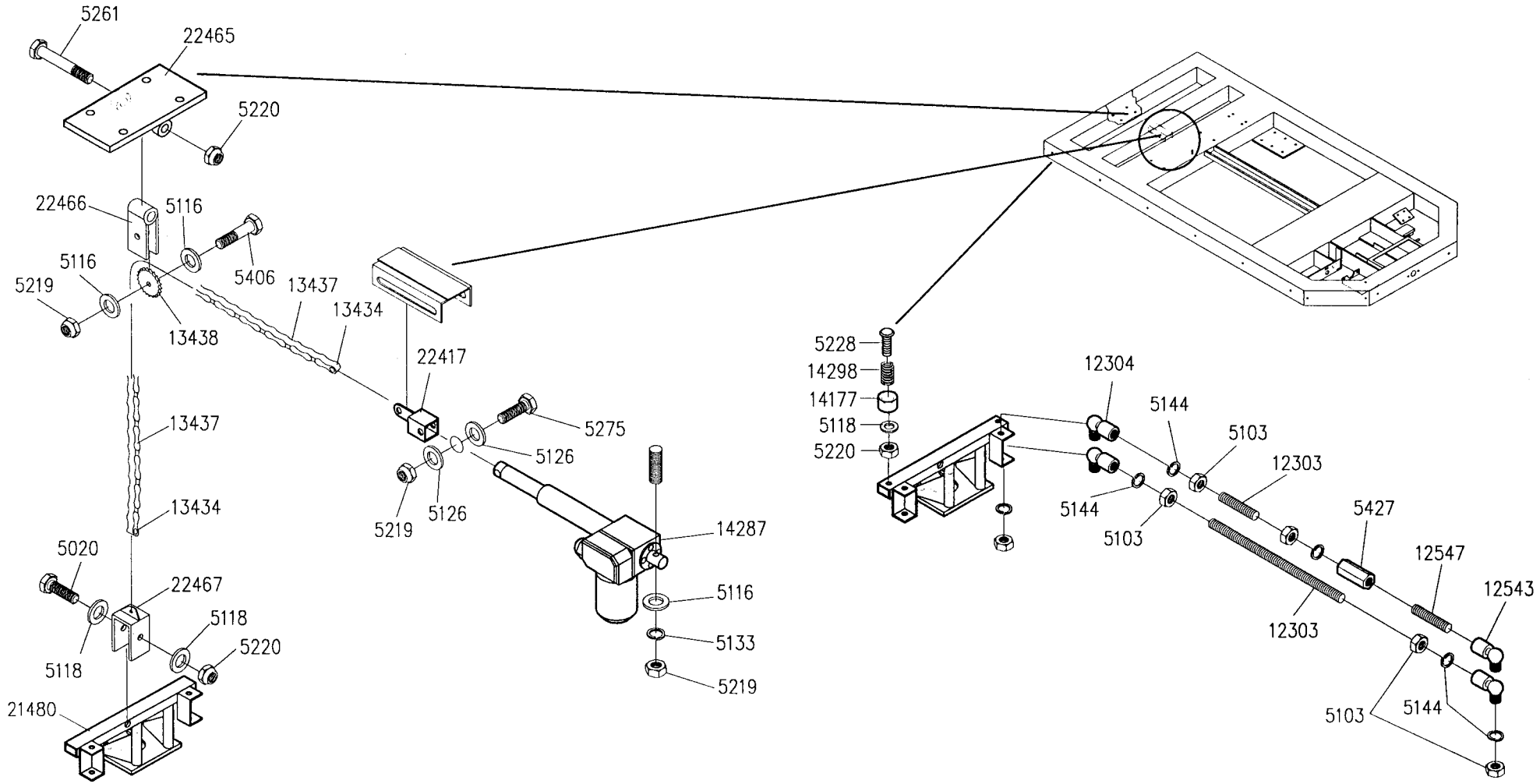

Typ: Model:	Titan 352 BF 130	2/2000
Saugfußaufhängung Squeegee suspension	Blatt: Page:	1026/1
Ab/bis Maschine Nr. From/up to machine no.	T352F00044/T352F00059	

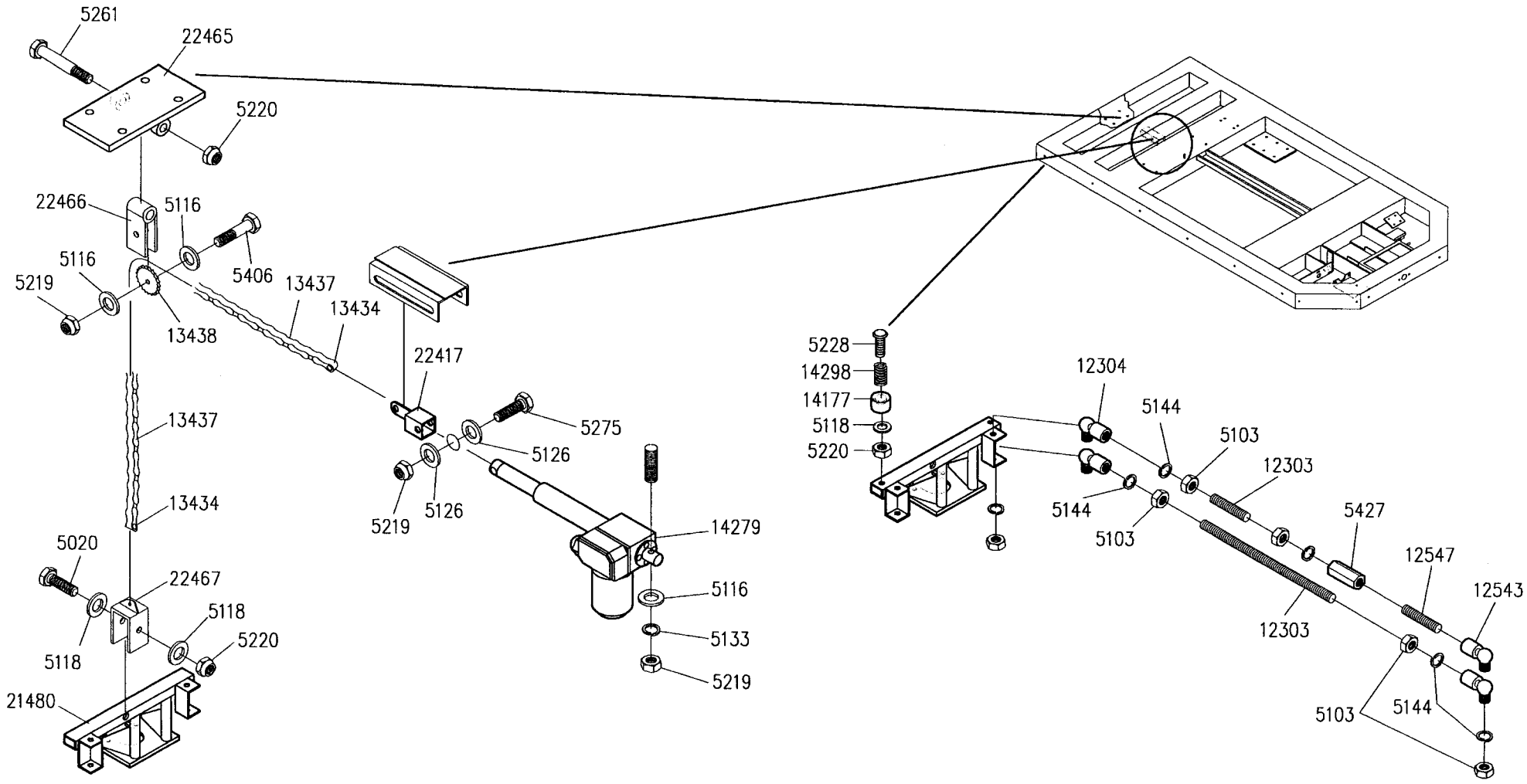

Typ: Model:	Titan 352 BF 130	2/2000
Saugfußaufhängung Squeegee suspension	Blatt: Page:	1026/1
Ab/bis Maschine Nr. From/up to machine no.	T352F00044/T352F00059	

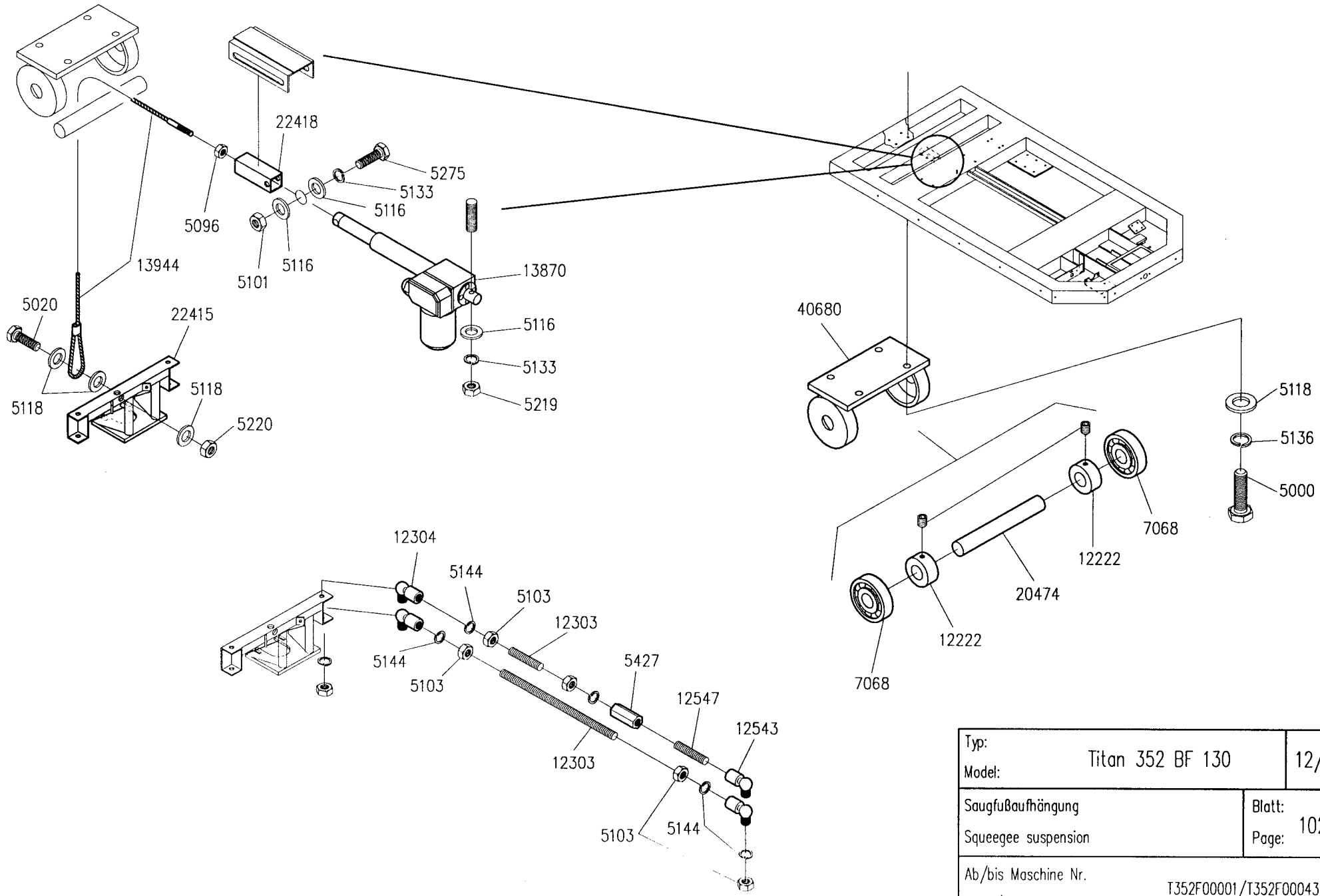

Typ: Model:	Titan 352 BF 130	12/98
Saugfußaufhängung Squeegee suspension	Blatt: Page:	1026/1
Ab/bis Maschine Nr. From/up to machine no.	T352F00001/T352F00043	

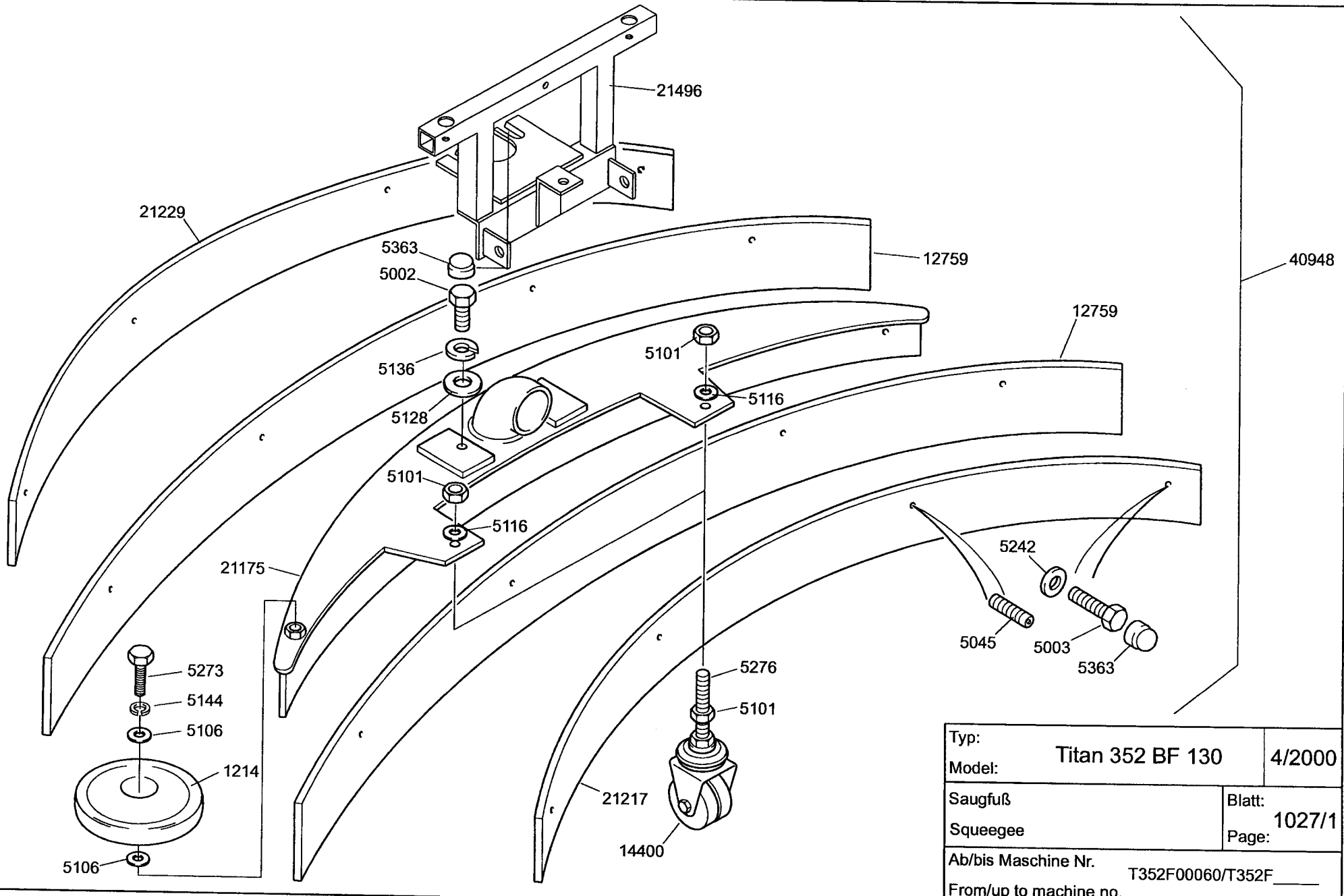

Typ: Model:	Titan 352 BF 130	4/2000
Saugfuß Squeegee	Blatt: Page:	1027/1
Ab/bis Maschine Nr. From/up to machine no.	T352F00060/T352F_____	

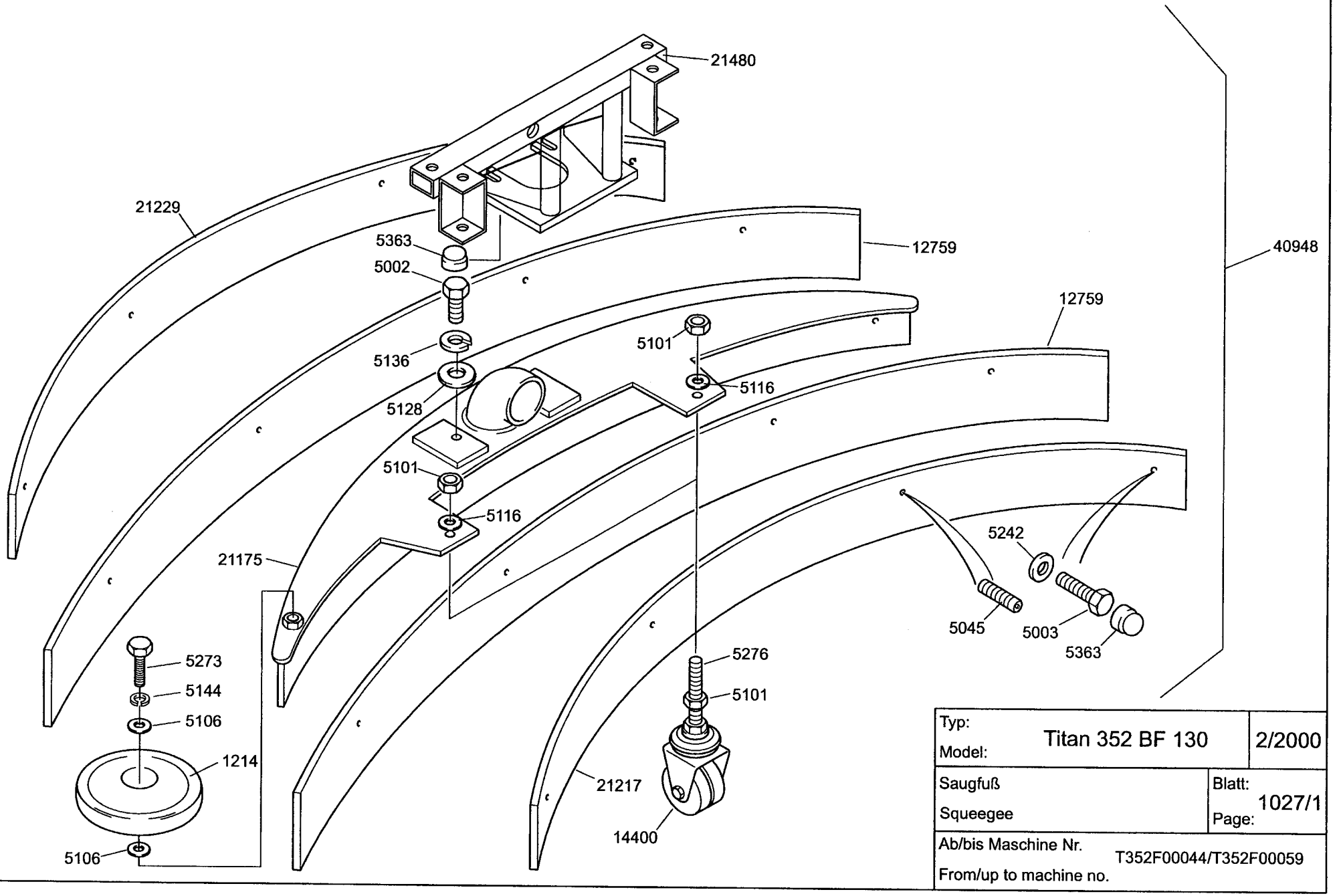

Typ: Model:	Titan 352 BF 130	2/2000
Saugfuß Squeegee		Blatt: Page: 1027/1
Ab/bis Maschine Nr. From/up to machine no.	T352F00044/T352F00059	

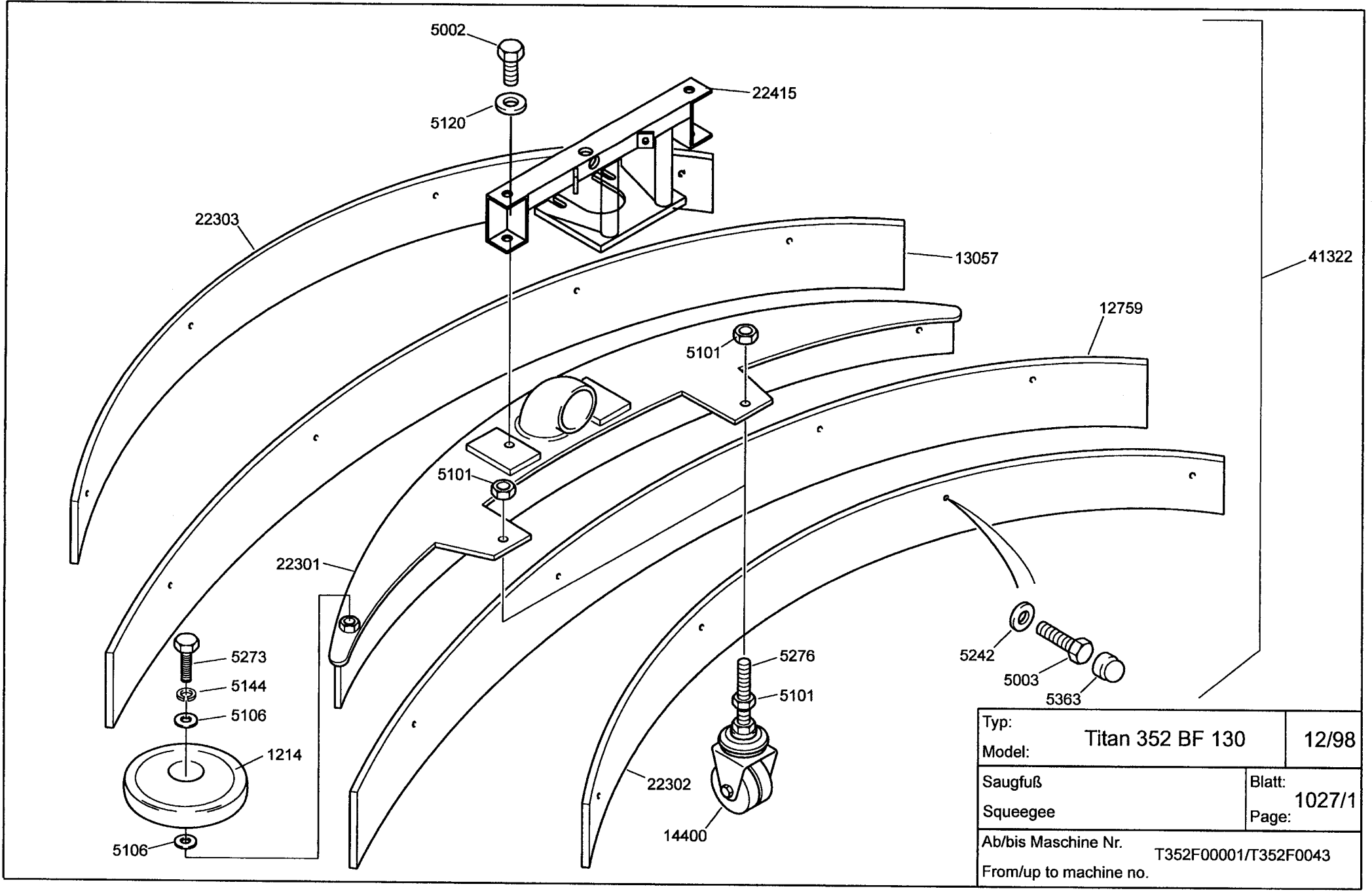

Typ: Model:	Titan 352 BF 130	12/98
Saugfuß Squeegee		Blatt: Page: 1027/1
Ab/bis Maschine Nr. From/up to machine no.	T352F00001/T352F0043	

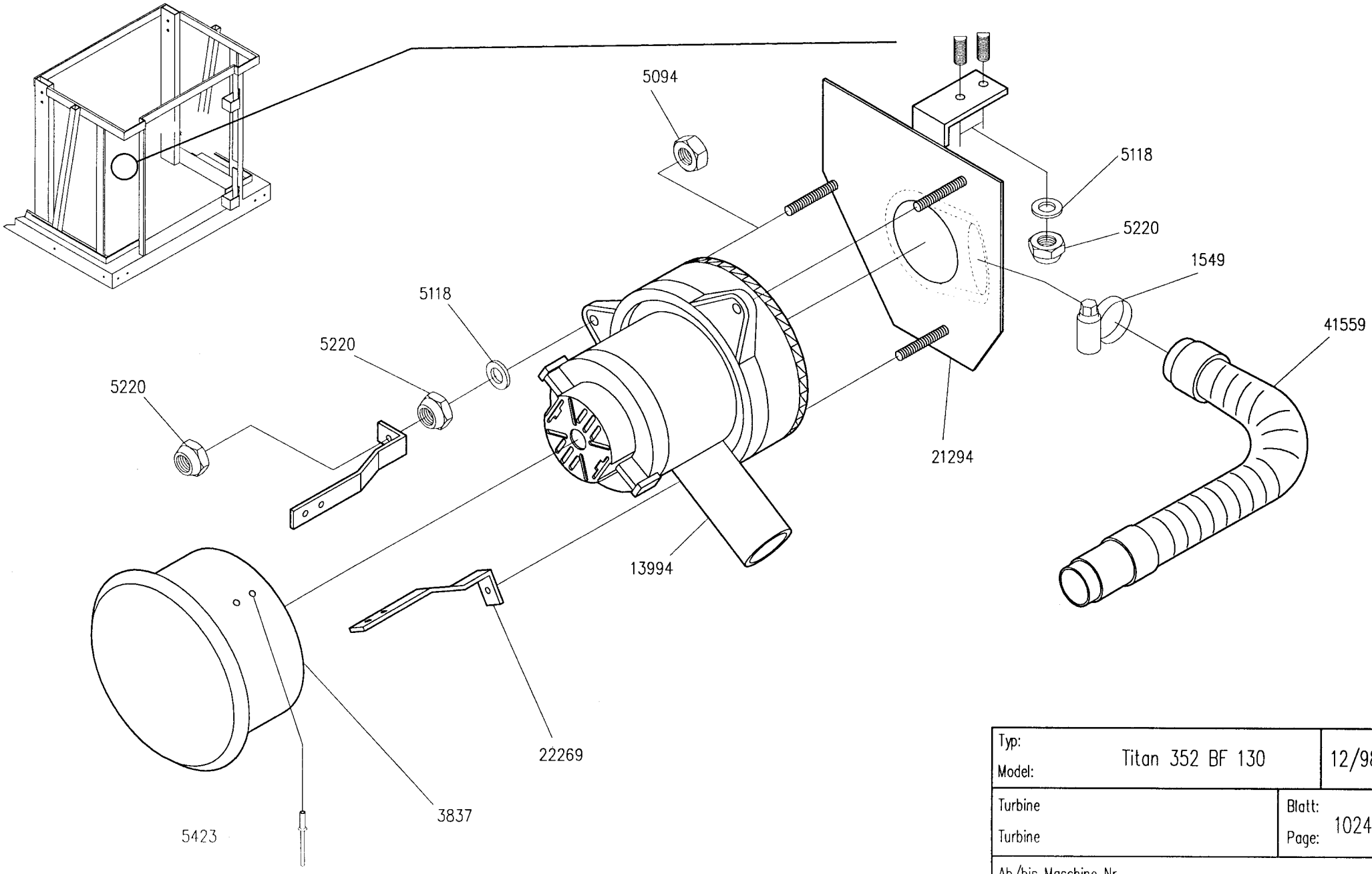

Typ: Model:	Titan 352 BF 130	12/98
Turbine Turbine	Blatt: Page:	1024/1
Ab/bis Maschine Nr. From/to up machine no.	T352F00001/T352F_____	

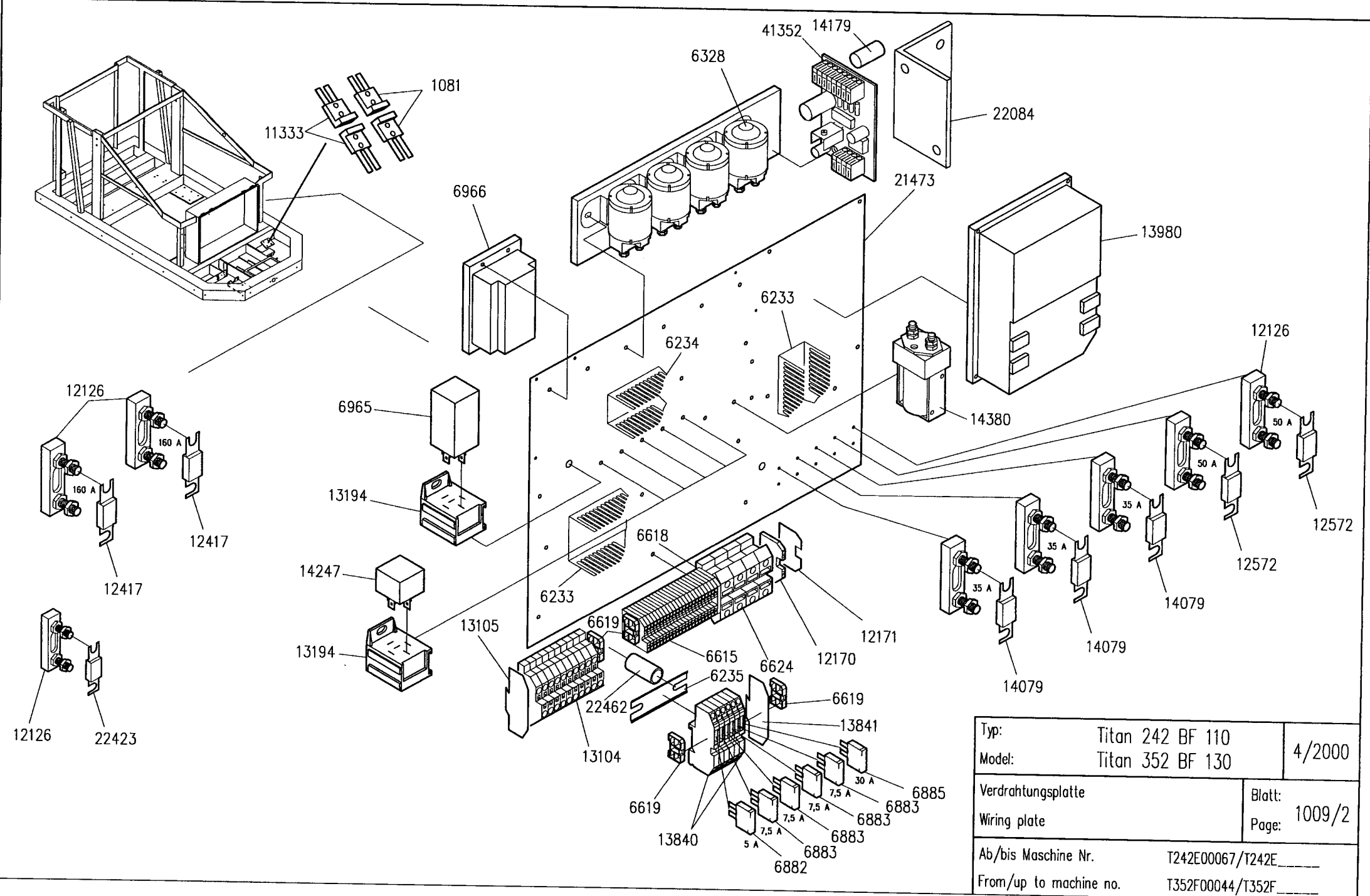

Typ: / Model:	Titan 242 BF 110 Titan 352 BF 130	4/2000
Verdrahtungsplatte Wiring plate	Blatt: Page:	1009/2
Ab/bis Maschine Nr. From/up to machine no.	T242E00067/T242E_____ T352F00044/T352F_____	

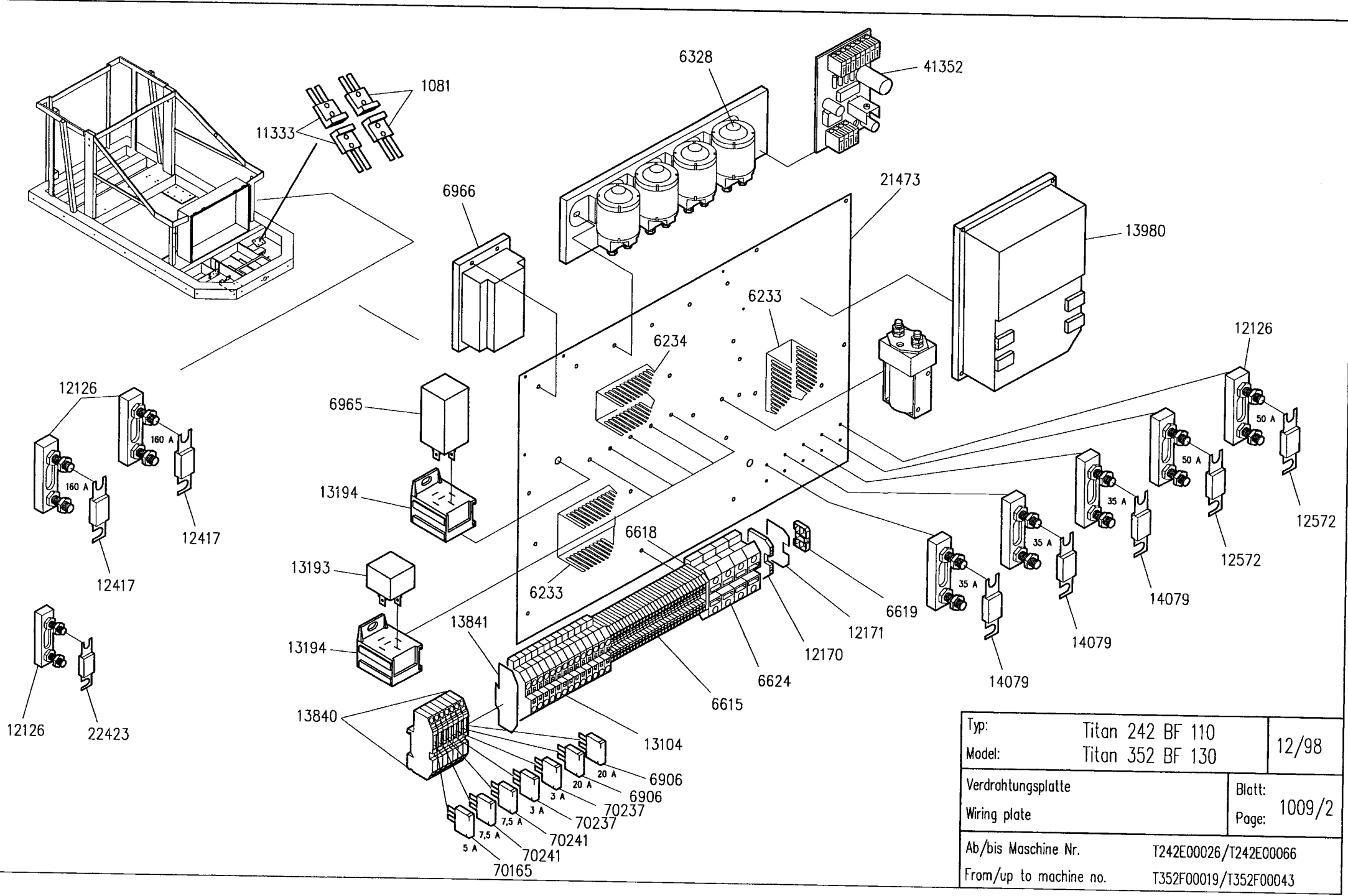

Typ: / Model:	Titan 242 BF 110 / Titan 352 BF 130	12/98
Verdrahtungsplatte / Wiring plate		Blatt: / Page: 1009/2
Ab/bis Maschine Nr. / From/up to machine no.	T242E00026/T242E00066 / T352F00019/T352F00043	

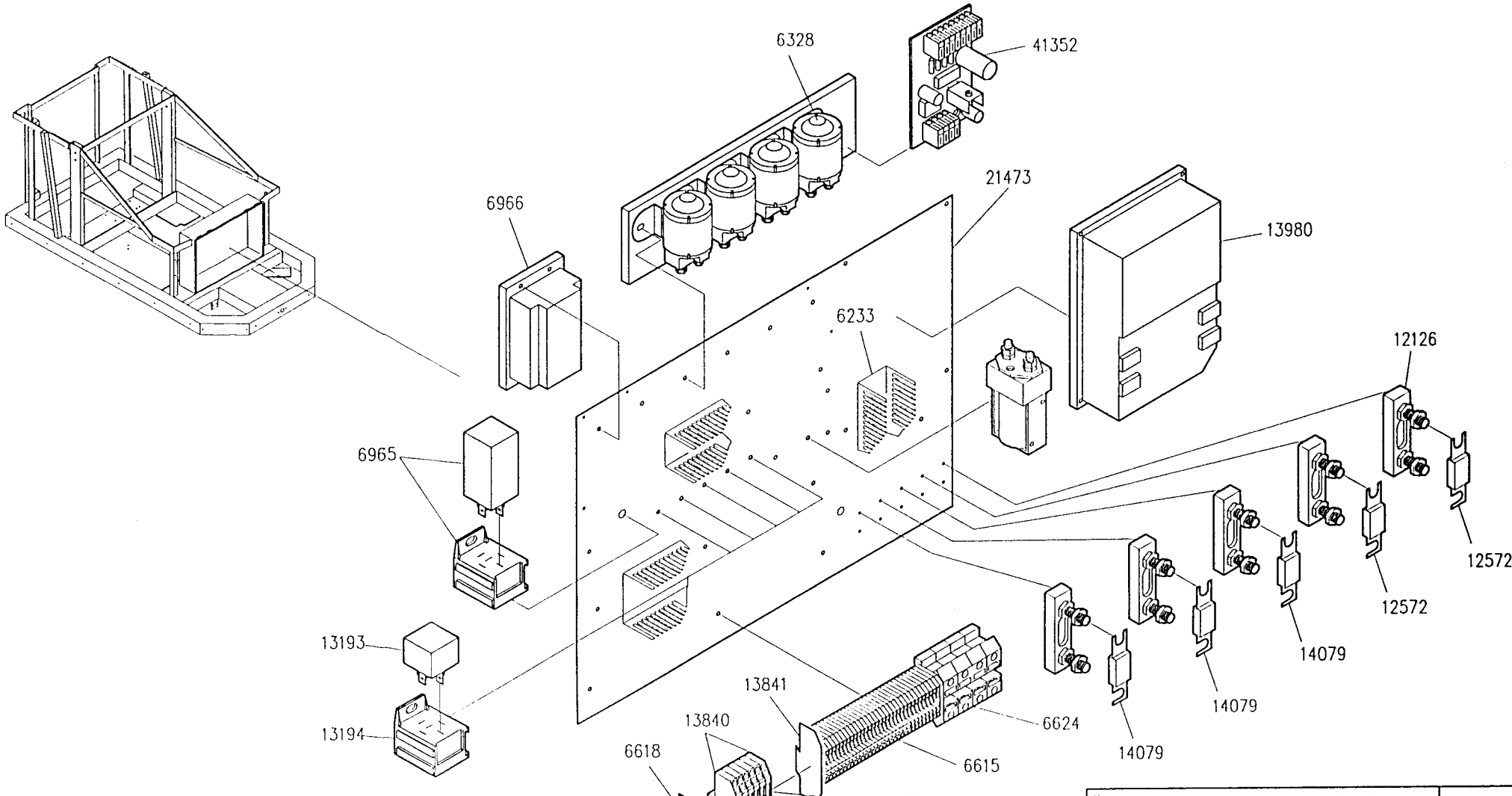

Typ: / Model:	Titan 242 BF 110 / Titan 352 BF 130	12/98
Verdrahtungsplatte / Wiring plate	Blatt: / Page:	1009/2
Ab/bis Maschine Nr. / From/up to machine no.	T242E00001/T242E00025 / T352F00001/T352F00018	

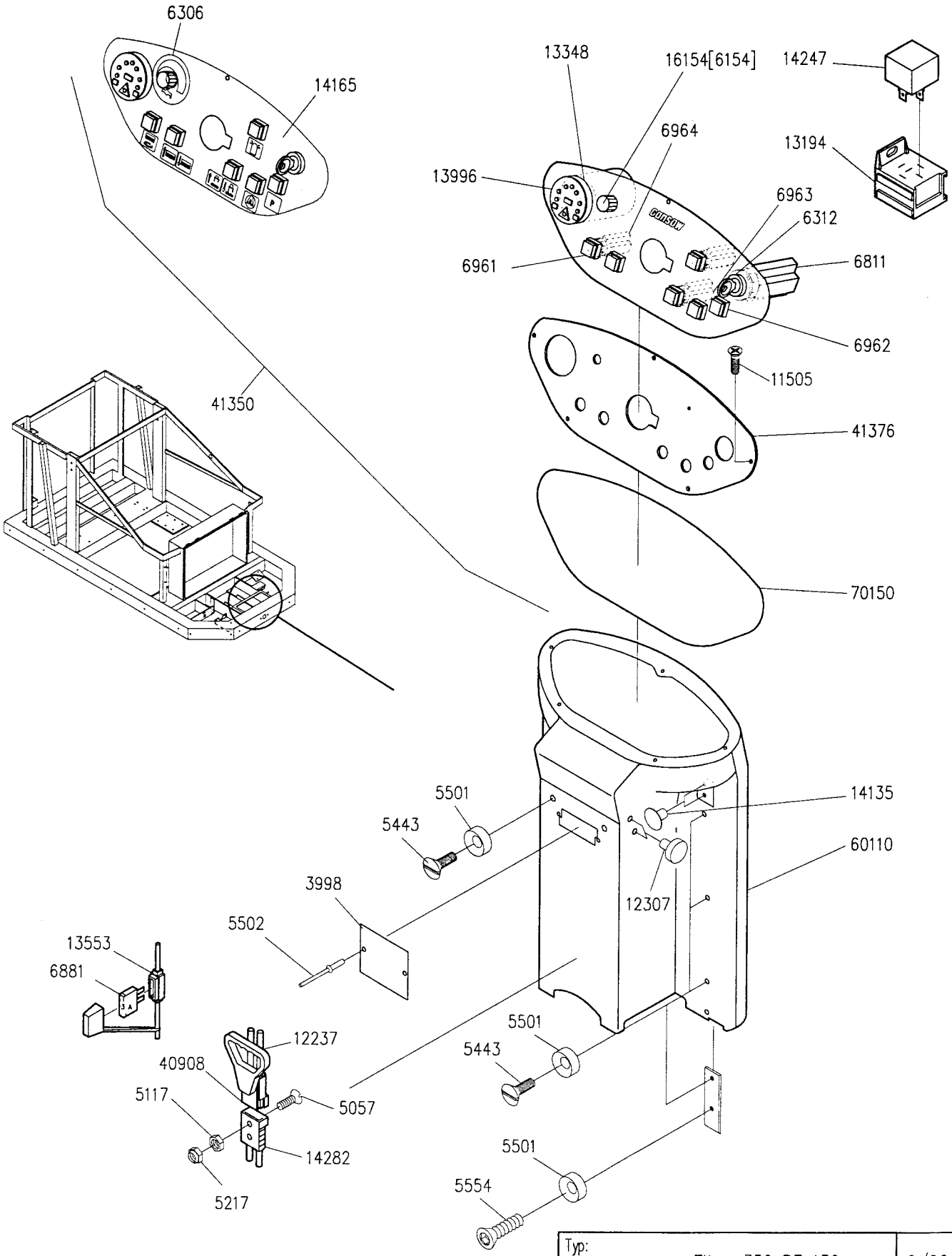

Typ: Model:	Titan 352 BF 130	2/2000
Fahrpult Switch board	Blatt: Page:	1022/1
Ab/bis Maschine Nr. From/up to machine no.	T352F00044/T352F_____	

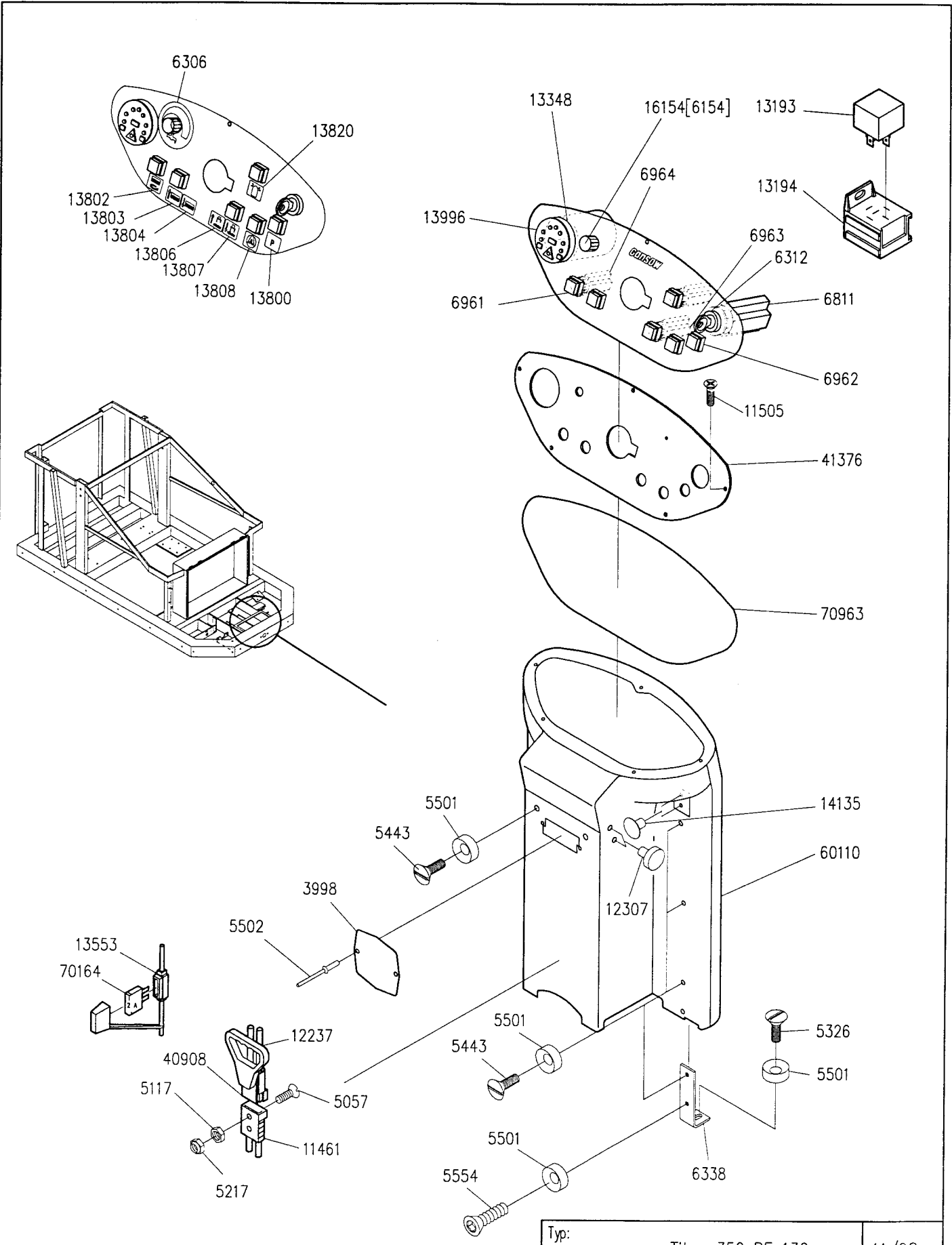

Typ: Model:	Titan 352 BF 130	11/98
Fahrpult Switch board	Blatt: Page:	1022/1
Ab/bis Maschine Nr. From/up to machine no.	T352F00001/T352F00043	

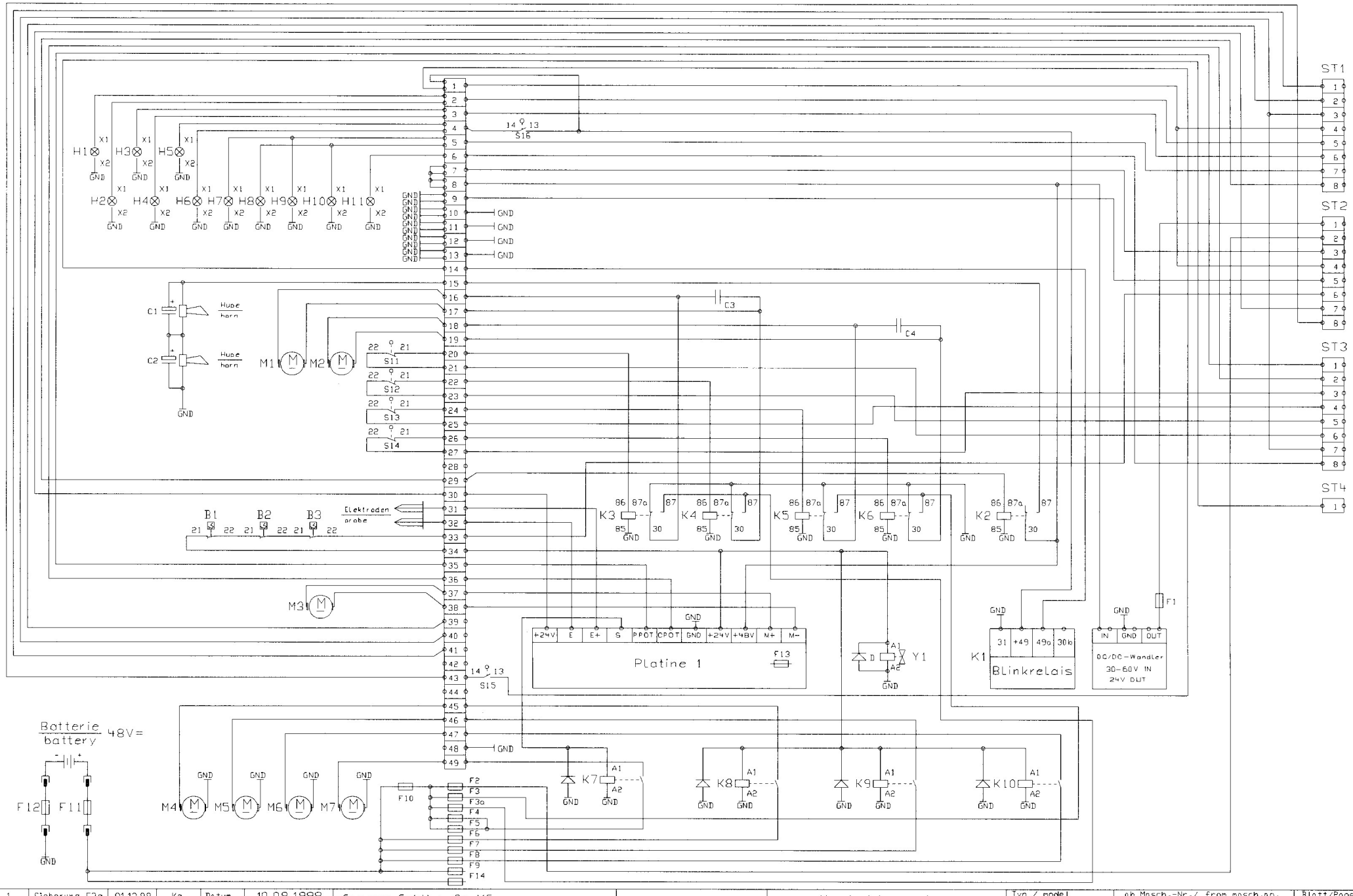

1	Sicherung F3a	01.12.98	Ka.	Datum	10.08.1998	Gansow GmbH + Co.KG Maschinenbau		Verdrahtungsplan wiring diagram Masch.-Steuerung/control mach.	Typ / model Titan 242BF110/60bt44 352BF130/90bt52	ab Masch.-Nr./ from masch.no. T242E00026/T352F00019	Blatt/Page 1/3
				Bearb.	Kampmann					bis Masch.-Nr./ up to masch.no. T242..... /T352.....	Datum/date 01.12.1998
				Gepr.							
Zust.	Änderung	Datum	Name	Norm		Urspr. 2421BF.011	Ers.f	Ers.d			

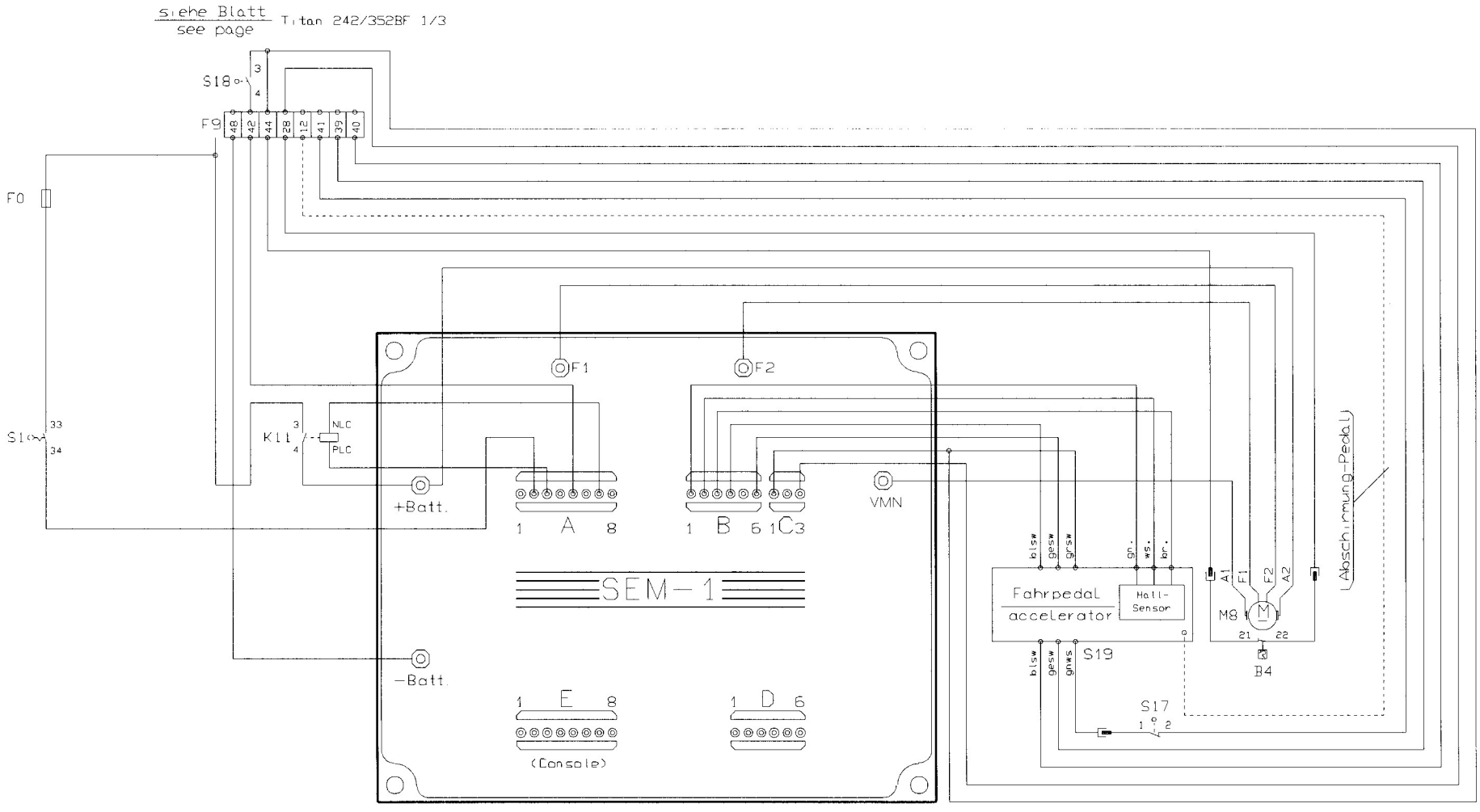

				Datum	10.08.1998	Gansow GmbH + Co.KG		Verdrahtungsplan	Typ / model	ab Masch.-Nr./ from masch.no.	Blatt/Page
				Bearb.	Kampmann	Maschinenbau		wiring diagram	Titan	T352F00001	2/3
				Gepr.						bis Masch.-Nr./ up to masch.no.	Datum/date
Zust.	Änderung	Datum	Name	Norm		Urspr. 352IBF 040	Ers.f	Ersd	Masch.-Steuerung/control mach.	352BF130/90bt52 T352 ...	09.1998

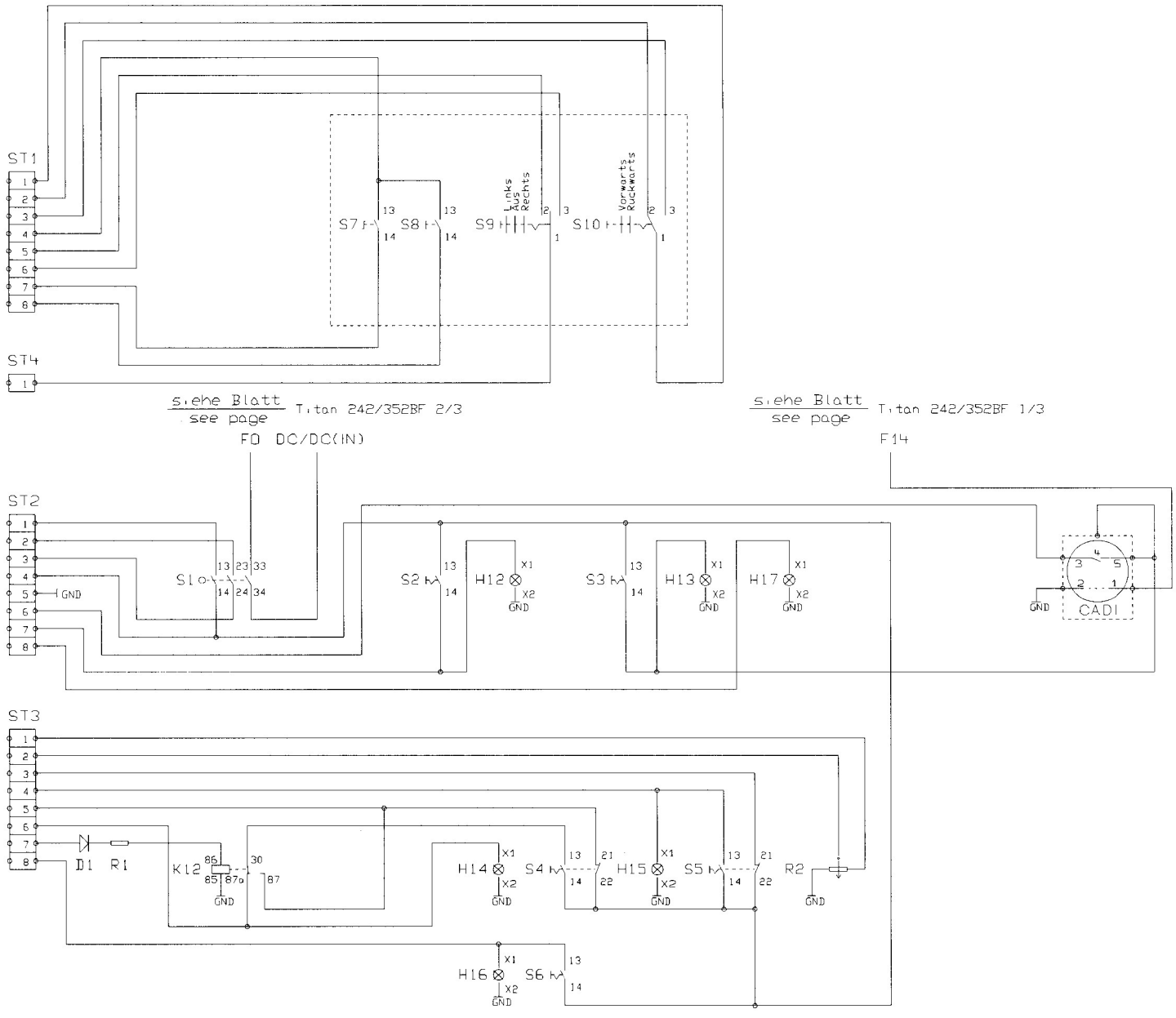

				Datum	10.08.1998	Gansow GmbH + Co.KG Maschinenbau		Verdrahtungsplan wiring diagramm Pult / panel	Typ / model Titan 242BF110/60bt44 352BF130/90bt52	ab Masch.-Nr./ from masch.no. T242E00001/T352F00001	Blatt/Page 3/3
				Bearb.	Kampmann					bis Masch.-Nr./ up to masch.no. T242..... /T352.....	Datum/date 10.08.1998
				Gepr.							
Zust.	Änderung	Datum	Name	Norm		Urspr. 2421BF030					

Typ/model Titan 352 BF 130

From/up to machine no. T352F00001/T352F00018

K1 = Contactor for, blinker (06965)
K2 = Contactor for, horn (13193)
K3 = Contactor to control linear actuator for, squeegee lifting (13193)
K4 = Contactor to control linear actuator for, squeegee lowering (13193)
K5 = Contactor to control linear actuator for, brush head lifting (13193)
K6 = Contactor to control linear actuator for, brush head lowering (13193)
K7 = Contactor for, vacuum motor (06328)
K8 = Contactor for, brush (06328)
K9 = Contactor for, brush 2 (06328)
K10 = Contactor for, brush 3 (06328)
K11 = Contactor for, traction control
K12 = Relays automatic lifting for, squeegee during reversing (13193)

B1,B2 B3 = Thermal contact, brushes

B4 = Thermal contact, traction

M1 = Linear actuator for, squeegee (13870)
M2 = Linear actuator for, brush head (13870)
M3 = Water pump (13963)
M4 = Motor, brush 1 (13965)
M5 = Motor, brush 2 (13965)
M6 = Motor, brush 3 (13965)
M7 = Turbine (13994)
M8 = Traction motor (13979)

F0 = Fuse, traction control, 5 A (70165)
F1 = Fuse, 7,5 A, controller, 24V (70241)
F2 = Fuse, 7,5 A, controller, 48V (70241)
F3 = Fuse, linear actuator for, squeegee and brush head, 5 A (70165)
F4 = Fuse, turbine, 20 A (06906)
F5 = Fuse, turbine, 20 A (06906)
F6 = Fuse, brush 1: 35 A (14079)
F7 = Fuse, brush 2: 35 A (14079)
F8 = Fuse, brush 3: 35 A (14079)
F9 = Fuse, traction, 50 A (12572)
F10 = Safety fuse, 50 A for, control unit 48V and vacuum motor (12572)
F11 = Main fuse, 160 A (12417)
F12 = Main fuse, 160 A (12417)
F13 = Fuse, water pump, 2 A mT (13484)
F14 = Fuse, Cadi, 2 A (13112)

S1 = Key switch (06811/06312)
S2 = Switch for vacuum motor, ON/OFF (06961/06964)
S3 = Switch for brushes, ON/OFF (06961/06964)
S4 = Switch to control linear actuator for, squeegee, lifting/lowering (06961/06963/06964)
S5 = Switch to control linear actuator for, brush head, lifting/lowering (06961/06963/06964)
S6 = Switch for, rotating flash light, ON/OFF (06961/06964)
S7 = Switch for, spot light, ON/OFF (70414)
S8 = Switch for, horn (70414)
S9 = Switch for, blinker, left side/right side (70414)
S10 = Switch for, traction, forwards/backwards (70414)
S11 = Limit switch for, squeegee, lowering (06974)
S12 = Limit switch for, squeegee, lifting (06974)
S13 = Limit switch for, brush, lowering (06974)

S14 = Limit switch for, brush, lifting (06974)
S15 = Limit switch for, hand brake indicator (06974)
S16 = Switch for, brake light (352 BF) (06974/06309)
S17 = Limit switch for, hand brake (06974)
S18 = Limit switch for, drivers seat
S19 = Accelerator pedal (12832)

H1 = Lamp for, blinker, front left side (optional) (06024)
H2 = Lamp for, blinker, rear left side, 24 V/10 W (06024)
H3 = Lamp for, blinker, front right side (optional) (06024)
H4 = Lamp for, blinker, rear right side, 24 V/10 W (06024)
H5 = Lamp for, stop light, left side, 24 V/10 W (06024)
H6 = Lamp for, stop light, right side, 24 V/10 W (06024)
H7 = Lamp for, spotlight, left side, 24 V/10 W (06024)
H8 = Lamp for, spotlight, right side, 24 V/10 W (06024)
H9 = Lamp for, rear light,left side, 24 V/5 W (06052)
H10 = Lamp for, rear light, right side, 24 V/5 W (06052)
H11 = Lamp for, rotating flash light (12059)
H12 = Indicator for, vacuum motor, ON/OFF (06961)
H13 = Indicator for, brushes, ON/OFF (06961)
H14 = Indicator for, linear actuator control for, squeegee lifting/lowering (06961)
H15 = Indicator for, linear actuator control for, brush head lifting/lowering (06961)
H16 = Indicator for, rotating flash light, ON/OFF (06961)
H17 = Indicator for, hand brake, ON/OFF (06962)

R1 = Resistor, 680 Ohm / 5 W (06972)
R2 = Potentiometer for, water pump controller (06154)

D = Protection diode, 1N 4007 (06088)
D1 = Diode, 1N 5404 (06088)

C1, C2 = Electrolyte capacitor, 100 µF / 40 V (06067)
C3, C4 = Capacitor, 2,2 µF / 400 V (06153)

Platine 1 = Vacuum motor protection, Water pump controller (41352)

DC / DC - Converter = 30-60 V IN, 24 V - 8,3 A OUT (06966)

Y1 = Solenoid valve (13144)

MB = Solenoid brake

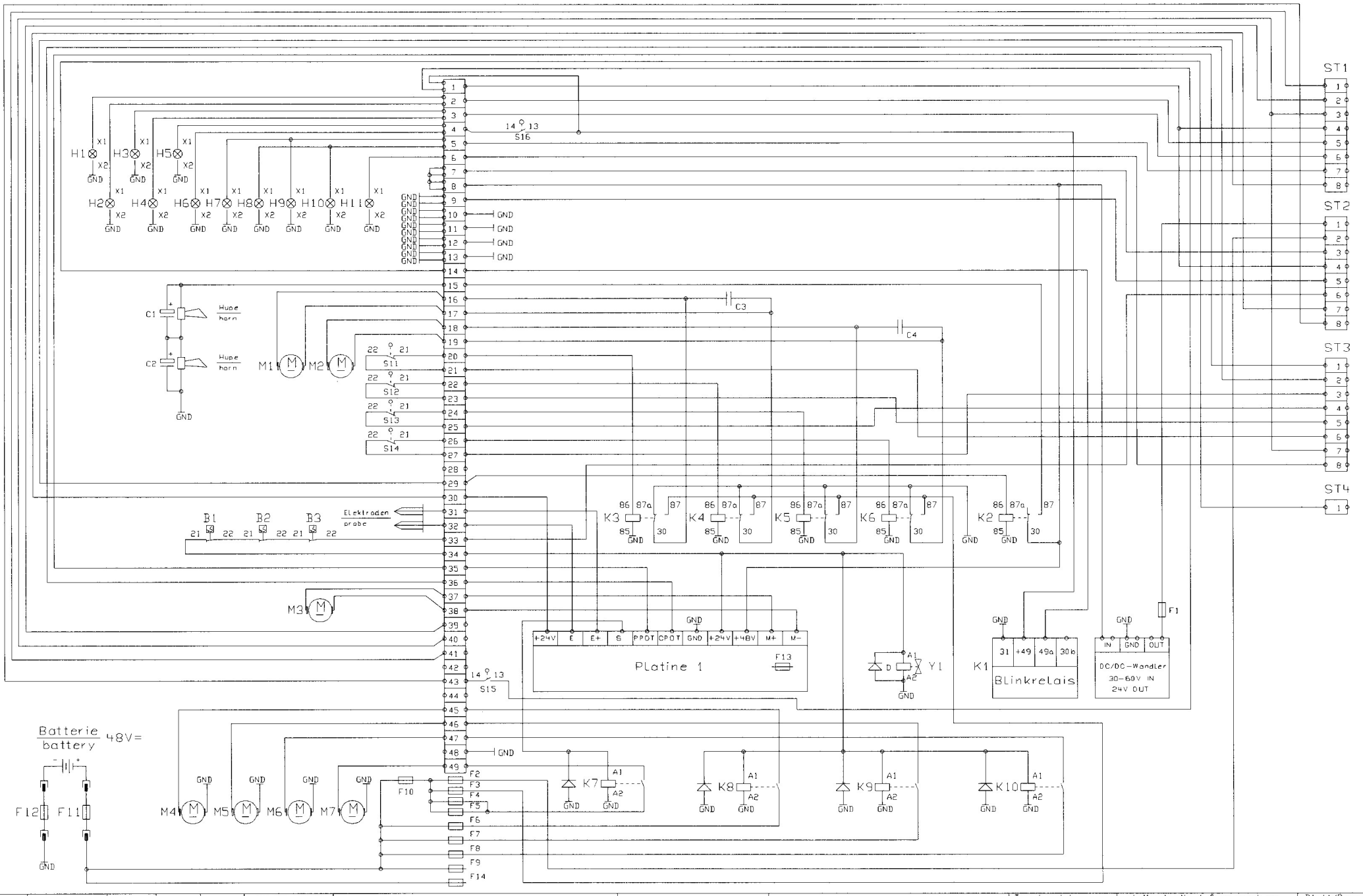

				Datum	10.08.1998	Gansow GmbH + Co.KG		Verdrahtungsplan	Typ / model	ab Masch.-Nr./ from masch.no.	Blatt/Page
				Bearb.	Kampmann	Maschinenbau		wiring diagram	Titan	T242E00001/T352F00001	1/3
				Gepr.					242BF110/60bt44	bis Masch.-Nr./ up to masch.no.	Datum/date
Zust.	Änderung	Datum	Name	Norm		Urspr. 242IBF 01D	Ers.f	Ers.d	Masch.-Steuerung/control mach. 352BF130/90bt52	T242..... /T352.....	10.08.1998

Typ/model Titan 352 BF 130

From/up to machine no. T352F00019/T352F_

K1 = Contactor for, blinker (06965)
K2 = Contactor for, horn (13193)
K3 = Contactor to control linear actuator for, squeegee lifting (13193)
K4 = Contactor to control linear actuator for, squeegee lowering (13193)
K5 = Contactor to control linear actuator for, brush head lifting (13193)
K6 = Contactor to control linear actuator for, brush head lowering (13193)
K7 = Contactor for, vacuum motor (06328)
K8 = Contactor for, brush (06328)
K9 = Contactor for, brush 2 (06328)
K10 = Contactor for, brush 3 (06328)
K11 = Contactor for, traction control
K12 = Relays automatic lifting for, squeegee during reversing (13193)

B1,B2 B3 = Thermal contact, brushes

B4 = Thermal contact, traction

M1 = Linear actuator for, squeegee (13870)
M2 = Linear actuator for, brush head (13870)
M3 = Water pump (13963)
M4 = Motor, brush 1 (13965)
M5 = Motor, brush 2 (13965)
M6 = Motor, brush 3 (13965)
M7 = Turbine (13994)
M8 = Traction motor (13979)

F0 = Fuse, traction control, 5 A (70165)
F1 = Fuse, 7,5 A, controller, 24V (70241)
F2 = Fuse, 7,5 A, controller, 48V (70241)
F3 = Fuse, linear actuator for, squeegee and brush head, 5 A (70165)
F3a = Fuse,linear actuator for,brush head, 3 A (70237)
F4 = Fuse, turbine, 20 A (06906)
F5 = Fuse, turbine, 20 A (06906)
F6 = Fuse, brush 1: 35 A (14079)
F7 = Fuse, brush 2: 35 A (14079)
F8 = Fuse, brush 3: 35 A (14079)
F9 = Fuse, traction, 50 A (12572)
F10 = Safety fuse, 50 A for, control unit 48V and vacuum motor (12572)
F11 = Main fuse, 160 A (12417)
F12 = Main fuse, 160 A (12417)
F13 = Fuse, water pump, 2 A mT (13484)
F14 = Fuse, Cadi, 2 A (13112)

S1 = Key switch (06811/06312)
S2 = Switch for vacuum motor, ON/OFF (06961/06964)
S3 = Switch for brushes, ON/OFF (06961/06964)
S4 = Switch to control linear actuator for, squeegee, lifting/lowering (06961/06963/06964)
S5 = Switch to control linear actuator for, brush head, lifting/lowering (06961/06963/06964)
S6 = Switch for, rotating flash light, ON/OFF (06961/06964)
S7 = Switch for, spot light, ON/OFF (70414)
S8 = Switch for, horn (70414)
S9 = Switch for, blinker, left side/right side (70414)
S10 = Switch for, traction, forwards/backwards (70414)
S11 = Limit switch for, squeegee, lowering (06974)
S12 = Limit switch for, squeegee, lifting (06974)

S13 = Limit switch for, brush, lowering (06974)
S14 = Limit switch for, brush, lifting (06974)
S15 = Limit switch for, hand brake indicator (06974)
S16 = Switch for, brake light (352 BF) (06974/06309)
S17 = Limit switch for, hand brake (06974)
S18 = Limit switch for, drivers seat
S19 = Accelerator pedal (12832)

H1 = Lamp for, blinker, front left side (optional) (06024)
H2 = Lamp for, blinker, rear left side, 24 V/10 W (06024)
H3 = Lamp for, blinker, front right side (optional) (06024)
H4 = Lamp for, blinker, rear right side, 24 V/10 W (06024)
H5 = Lamp for, stop light, left side, 24 V/10 W (06024)
H6 = Lamp for, stop light, right side, 24 V/10 W (06024)
H7 = Lamp for, spotlight, left side, 24 V/10 W (06024)
H8 = Lamp for, spotlight, right side, 24 V/10 W (06024)
H9 = Lamp for, rear light,left side, 24 V/5 W (06052)
H10 = Lamp for, rear light, right side, 24 V/5 W (06052)
H11 = Lamp for, rotating flash light (12059)
H12 = Indicator for, vacuum motor, ON/OFF (06961)
H13 = Indicator for, brushes, ON/OFF (06961)
H14 = Indicator for, linear actuator control for, squeegee lifting/lowering (06961)
H15 = Indicator for, linear actuator control for, brush head lifting/lowering (06961)
H16 = Indicator for, rotating flash light, ON/OFF (06961)
H17 = Indicator for, hand brake, ON/OFF (06962)

R1 = Resistor, 680 Ohm / 5 W (06972)
R2 = Potentiometer for, water pump controller (06154)

D = Protection diode, 1N 4007 (06088)
D1 = Diode, 1N 5404 (06088)

C1, C2 = Electrolyte capacitor, 100 µF / 40 V (06067)
C3, C4 = Capacitor, 2,2 µF / 400 V (06153)

Platine 1 = Vacuum motor protection, Water pump controller (41352)

DC / DC - Converter = 30-60 V IN, 24 V - 8,3 A OUT (06966)

Y1 = Solenoid valve (13144)

MB = Solenoid brake

Cadi = Computer aided discharge indicator with shut down of brush motors (13996)
SEM-1 = Traction control, 48 V / 200 A (13980)

Hupe = Horn - 24 V /336 Hz (06284)

ST. 1 = 8 pin plug (06904/06905/13591/13592)
ST. 2 = 8 pin plug (06904/06905/13591/13592)
ST. 3 = 8 pin plug (06904/06905/13591/13592(
ST. 4 = 1 pin plug (06745/06747)

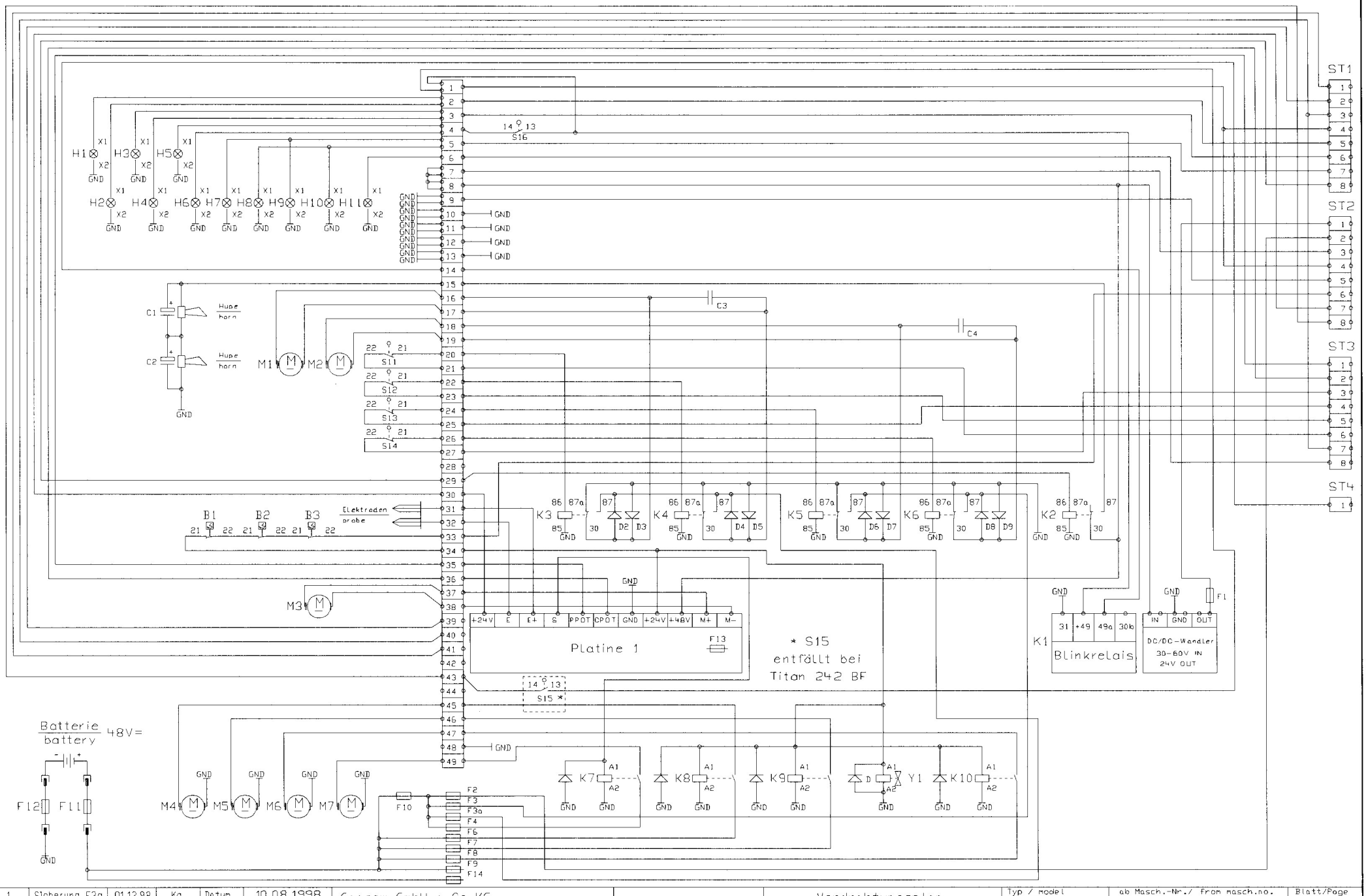

1	Sicherung F3a	01.12.98	Ka.	Datum	10.08.1998	Gansow GmbH + Co.KG Maschinenbau		Verdrahtungsplan wiring diagramm Masch.-Steuerung/control mach.	Typ / model Titan 242BF110/60bt44 352BF130/90bt52	ab Masch.-Nr./ from masch.no. T242E00067/T352F00045	Blatt/Page 1/3
2	S1,F5 entfällt	21.04.99	Ka.	Bearb.	Kampmann					bis Masch.-Nr./ up to masch.no. T242..... /T352.....	Datum/date 21.04.1999
3	Dioden/Sicheru.	21.04.99	Ka.	Gepr.							
Zust.	Änderung	Datum	Name	Norm		Urspr. 242IBF.012	Ers.f	Ers.d			

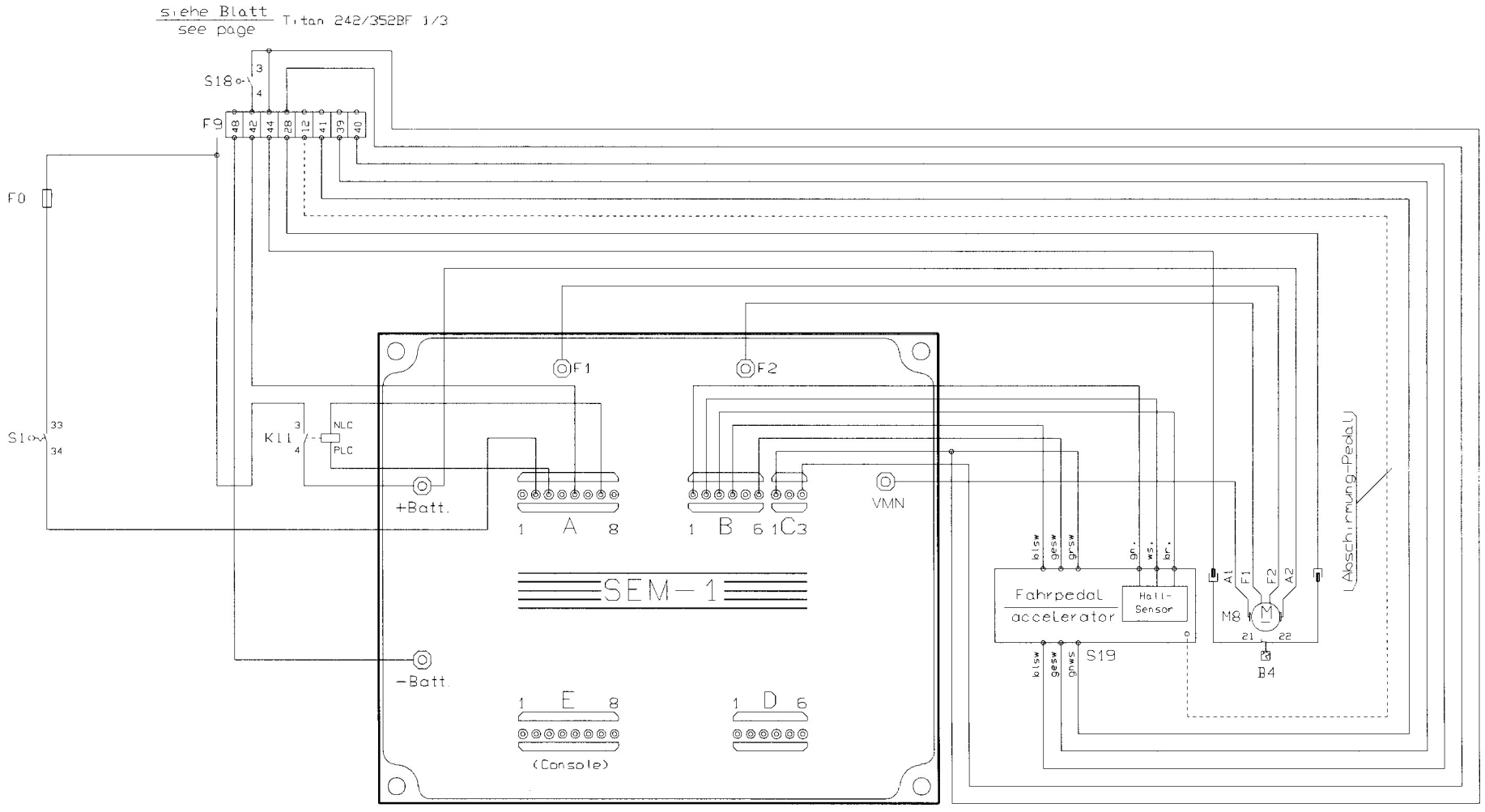

1	S17 entfällt	21.04.99	Ka.	Datum	10.08.1998	Gansow GmbH + Co.KG		Verdrahtungsplan	Typ / model	ab Masch.-Nr./ from masch.no.	Blatt/Page
				Bearb.	Kampmann	Maschinenbau		wiring diagram	Titan	T352F00045	2/3
				Gepr.						bis Masch.-Nr./ up to masch.no.	Datum/date
Zust.	Änderung	Datum	Name	Norm		Urspr. 352IBF 041	Ers.f	Ers.d	Masch.-Steuerung/control mach. 352BF130/90bt52	T352.....	04.1999

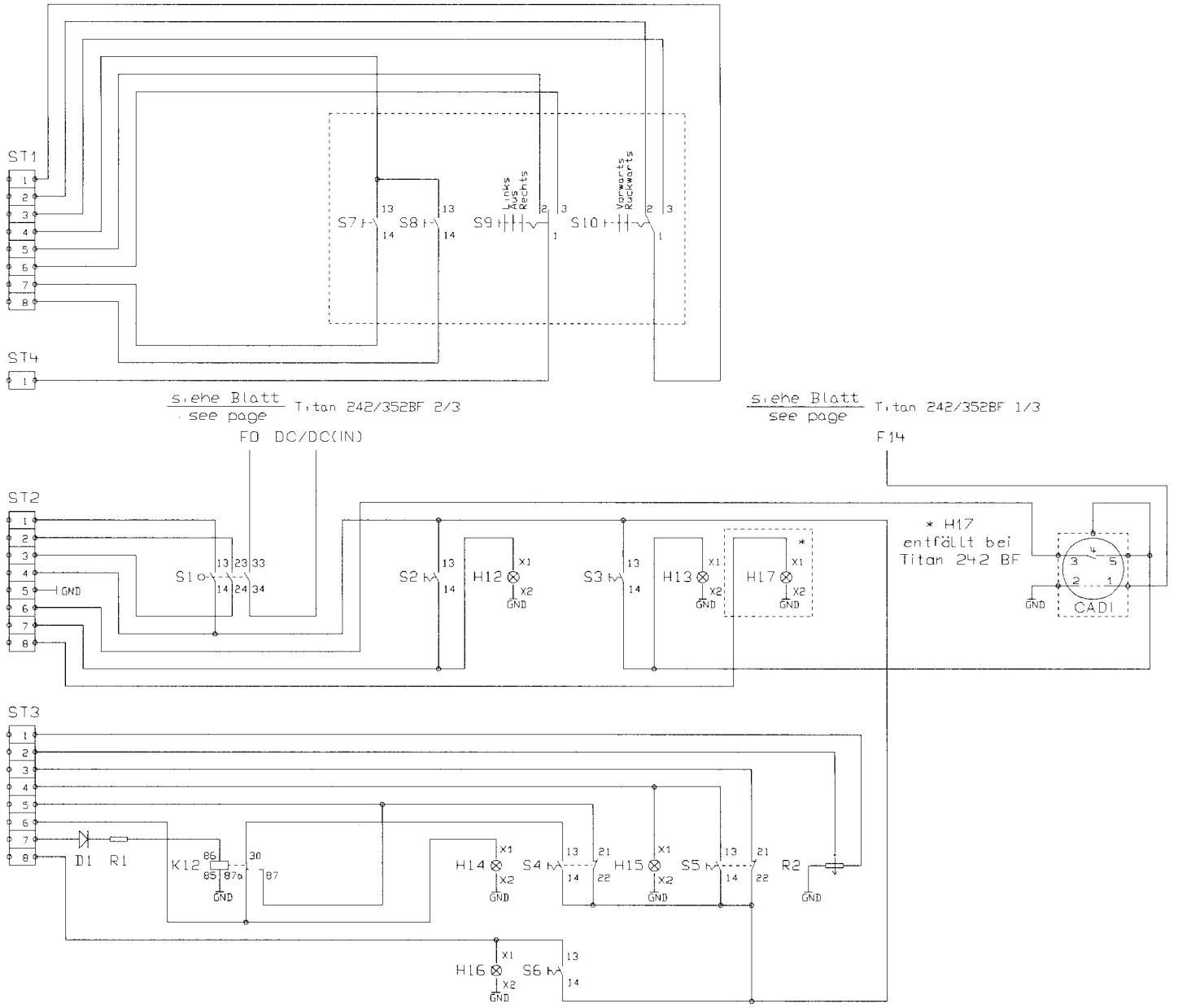

1	H17 entfällt	21.04.99	Ka.	Datum	10.08.1998	Gansow GmbH + Co.KG		Verdrahtungsplan	Typ / model	ab Masch.-Nr./ from masch.no.	Blatt/Page
	bei 242 BF			Bearb.	Kampmann	Maschinenbau		wiring diagramm	Titan	T242E00067/T352F00001	3/3
				Gepr.				Pult / panel	242BF110/60bt44	bis Masch.-Nr./ up to masch.no.	Datum/date
Zust.	Änderung	Datum	Name	Norm		Urspr. 2421BF.031			352BF130/90bt52	T242..... /T352.....	21.04.1999

Typ/model Titan 352 BF 130

From/up to machine no. T352F00045/T352F00078

K1 = Contactor for, blinker (06965)
K2 = Contactor for, horn (13193)
K3 = Contactor to control linear actuator for, squeegee lifting (13193)
K4 = Contactor to control linear actuator for, squeegee lowering (13193)
K5 = Contactor to control linear actuator for, brush head lifting (13193)
K6 = Contactor to control linear actuator for, brush head lowering (13193)
K7 = Contactor for, vacuum motor (06328)
K8 = Contactor for, brush (06328)
K9 = Contactor for, brush 2 (06328)
K10 = Contactor for, brush 3 (06328)
K11 = Contactor for, traction control
K12 = Relays automatic lifting for, squeegee during reversing (13193)

B1,B2 B3 = Thermal contact, brushes

B4 = Thermal contact, traction

M1 = Linear actuator for, squeegee (14279)
M2 = Linear actuator for, brush head (14279)
M3 = Water pump (13963)
M4 = Motor, brush 1 (13965)
M5 = Motor, brush 2 (13965)
M6 = Motor, brush 3 (13965)
M7 = Turbine (13994)
M8 = Traction motor (13979)

F0 = Fuse, traction control, 80 V / 5 A (06882)
F1 = Fuse, 80 V / 7,5 A, controller, 24V (06883)
F2 = Fuse, 80 V / 7,5 A, controller, 48V (06883)
F3 = Fuse, linear actuator for, squeegee and brush head, 80 V / 7,5 A (06883)
F3a = Fuse,linear actuator for,brush head, 80 V / 7,5 A (06883)
F4 = Fuse, turbine, 80 V / 30 A (06885)
F6 = Fuse, brush 1: 35 A (14079)
F7 = Fuse, brush 2: 35 A (14079)
F8 = Fuse, brush 3: 35 A (14079)
F9 = Fuse, traction, 50 A (12572)
F10 = Safety fuse, 50 A for, control unit 48V and vacuum motor (12572)
F11 = Main fuse, 160 A (12417)
F12 = Main fuse, 160 A (12417)
F13 = Fuse, water pump, 2 A mT (13484)
F14 = Fuse, Cadi, 80 V / 3 A (06881)

S1 = Key switch (06811/06312)
S2 = Switch for vacuum motor, ON/OFF (06961/06964)
S3 = Switch for brushes, ON/OFF (06961/06964)
S4 = Switch to control linear actuator for, squeegee, lifting/lowering (06961/06963/06964)
S5 = Switch to control linear actuator for, brush head, lifting/lowering (06961/06963/06964)
S6 = Switch for, rotating flash light, ON/OFF (06961/06964)
S7 = Switch for, spot light, ON/OFF (70414)
S8 = Switch for, horn (70414)
S9 = Switch for, blinker, left side/right side (70414)
S10 = Switch for, traction, forwards/backwards (70414)
S11 = Limit switch for, squeegee, lowering (06974)
S12 = Limit switch for, squeegee, lifting (06974)

S13 = Limit switch for, brush, lowering (06974)
S14 = Limit switch for, brush, lifting (06974)
S15 = Limit switch for, hand brake indicator (06974)
S16 = Switch for, brake light (352 BF) (06974/06309)
S18 = Limit switch for, drivers seat
S19 = Accelerator pedal (12832)

H1 = Lamp for, blinker, front left side (optional) (06024)
H2 = Lamp for, blinker, rear left side, 24 V/10 W (06024)
H3 = Lamp for, blinker, front right side (optional) (06024)
H4 = Lamp for, blinker, rear right side, 24 V/10 W (06024)
H5 = Lamp for, stop light, left side, 24 V/10 W (06024)
H6 = Lamp for, stop light, right side, 24 V/10 W (06024)
H7 = Lamp for, spotlight, left side, 24 V/10 W (06024)
H8 = Lamp for, spotlight, right side, 24 V/10 W (06024)
H9 = Lamp for, rear light,left side, 24 V/5 W (06052)
H10 = Lamp for, rear light, right side, 24 V/5 W (06052)
H11 = Lamp for, rotating flash light (12059)
H12 = Indicator for, vacuum motor, ON/OFF (06961)
H13 = Indicator for, brushes, ON/OFF (06961)
H14 = Indicator for, linear actuator control for, squeegee lifting/lowering (06961)
H15 = Indicator for, linear actuator control for, brush head lifting/lowering (06961)
H16 = Indicator for, rotating flash light, ON/OFF (06961)
H17 = Indicator for, hand brake, ON/OFF 352 BF (06962)

R1 = Resistor, 680 Ohm / 5 W (06972)
R2 = Potentiometer for, water pump controller (06154)

D = Protection diode, 1N 4007 (06088)
D1 = Diode, 1N 5404 (06088)
D2-D9 = Protection diode, 1 N 5404 (06160)

C1, C2 = Electrolyte capacitor, 100 µF / 40 V (06067)
C3, C4 = Capacitor, 2,2 µF / 400 V (06153)

Platine 1 = Vacuum motor protection, Water pump controller (41352)

DC / DC - Converter = 30-60 V IN, 24 V - 8,3 A OUT (06966)

Y1 = Solenoid valve (14089)

MB = Solenoid brake

Cadi = Computer aided discharge indicator with shut down of brush motors (13996)
SEM-1 = Traction control, 48 V / 200 A (13980)

Hupe = Horn - 24 V / 336 Hz (06284)

ST. 1 = 8 pin plug (06904/06905/13591/13592)
ST. 2 = 8 pin plug (06904/06905/13591/13592)
ST. 3 = 8 pin plug (06904/06905/13591/13592(
ST. 4 = 1 pin plug (06745/06747)

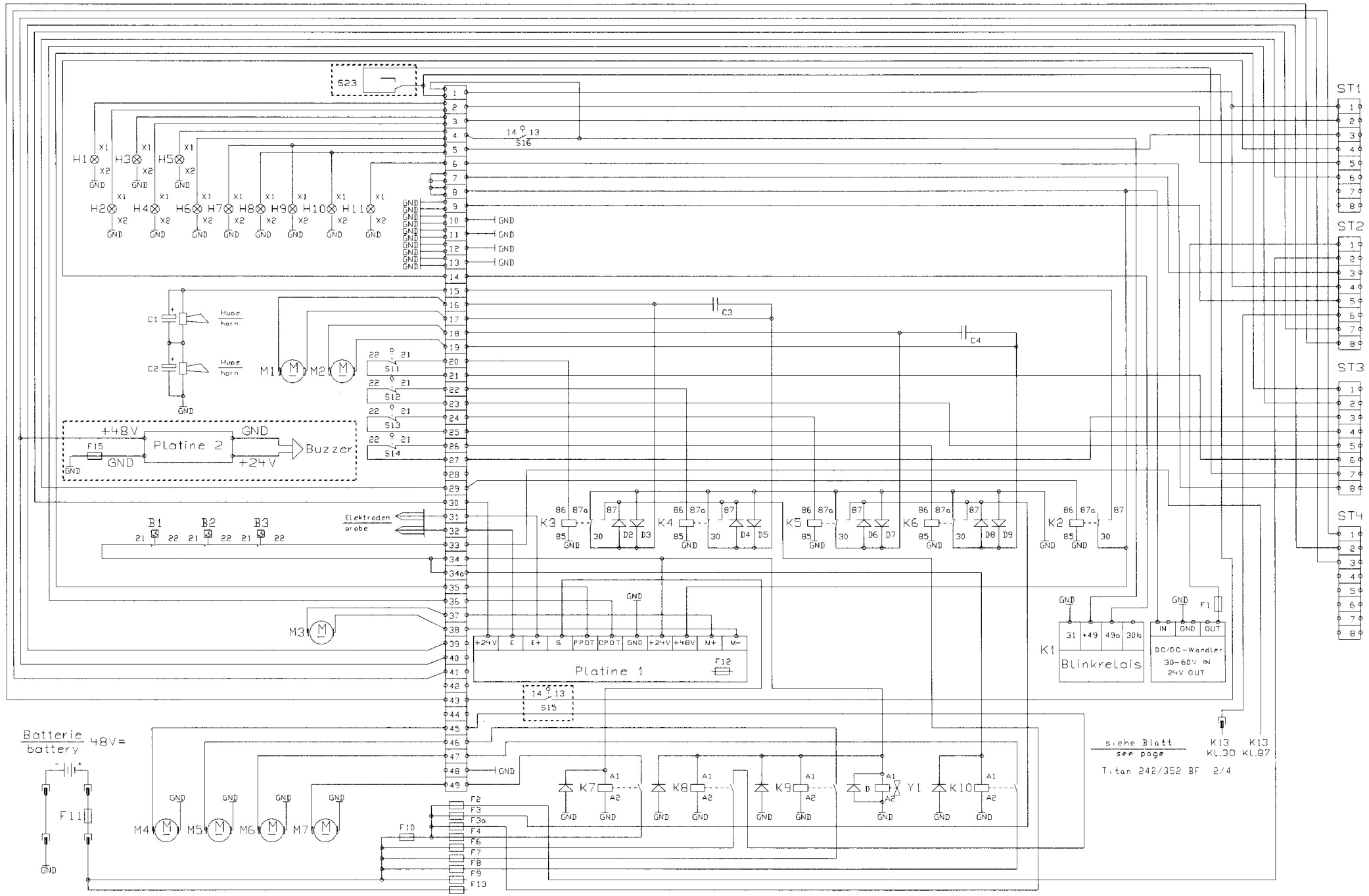

				Datum	27.06.2000	Gansow GmbH + Co.KG Maschinenbau		Verdrahtungsplan wiring diagramm	Typ / model Titan	ab Masch.-Nr./ from masch.no. T242_0137/T242X_0001/T352_0076	Blatt/Page 1/4
				Bearb.	Kampmann				2428F110+E/60bt44	bis Masch.-Nr./ up to masch.no. T242..../T242X..../T352....	Datum/date 06.2000
				Gepr.				Masch.-Steuerung/control mach.	3528F130/90bt52		
Zust.	Änderung	Datum	Name	Norm		Urspr. Titan.010	Ers.f	Ers.d			

siehe Blatt / see page Titan 242/352 BF 1/4

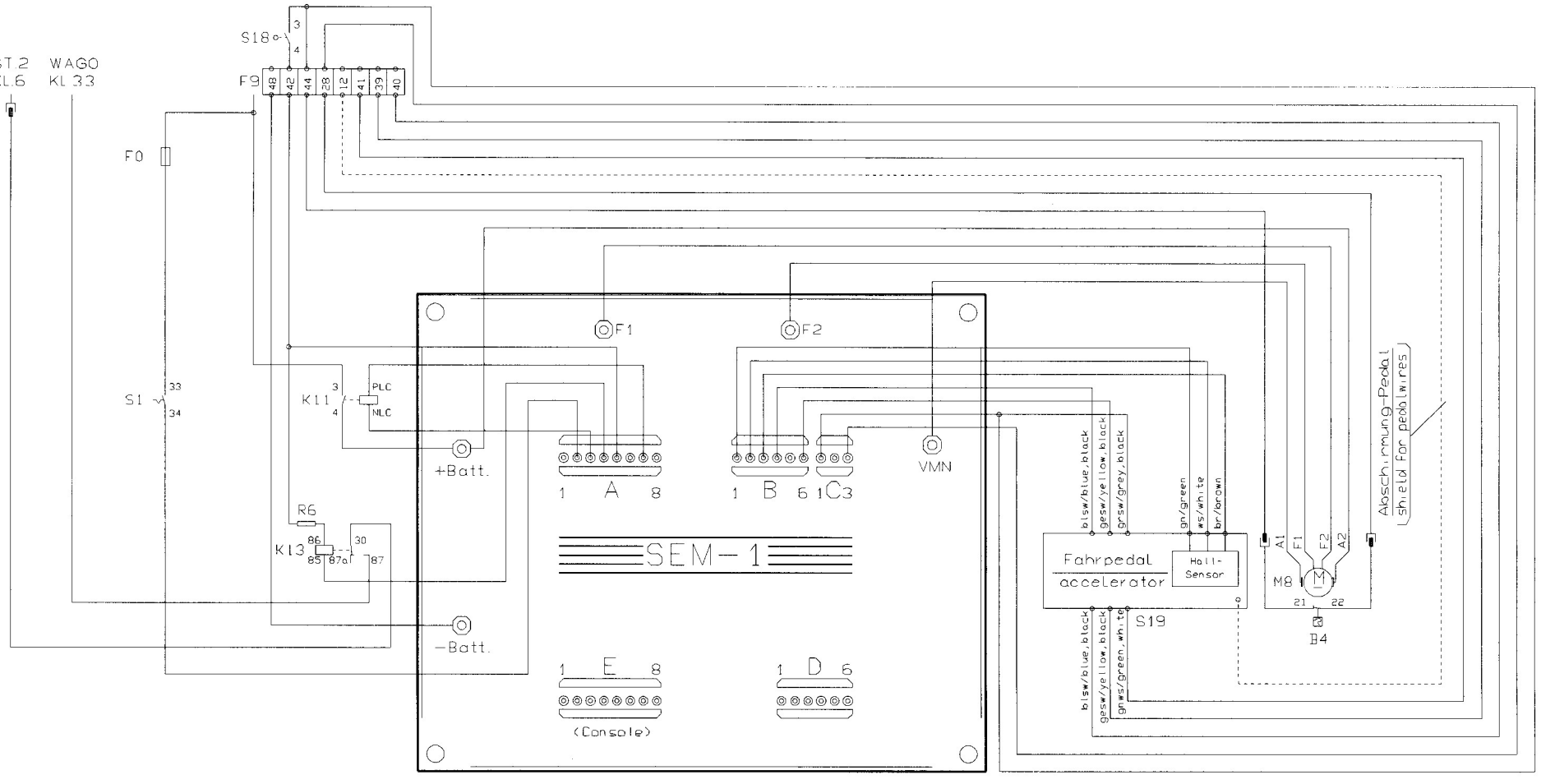

1	Bauser BEM	20.09.00	Ka.	Datum	27.06.2000	Gansow GmbH + Co.KG Maschinenbau			Verdrahtungsplan wiring diagram Masch.-Steuerung/control mach.	Typ / model Titan 242BF110+E/60bt44 352BF130/90bt52	ab Masch.-Nr./ from masch.no. T242_0145/T242X_0001/T352_0079	Blatt/Page 2/4
	T242BF ohne MB	20.09.00	Ka.	Bearb.	Kampmann						bis Masch.-Nr./ up to masch.no. T242_0153/T242X_0015/T352....	Datum/date 09.2000
				Gepr.								
Zust.	Änderung	Datum	Name	Norm		Urspr. TITAN.020	Ers.f	Ers.d				

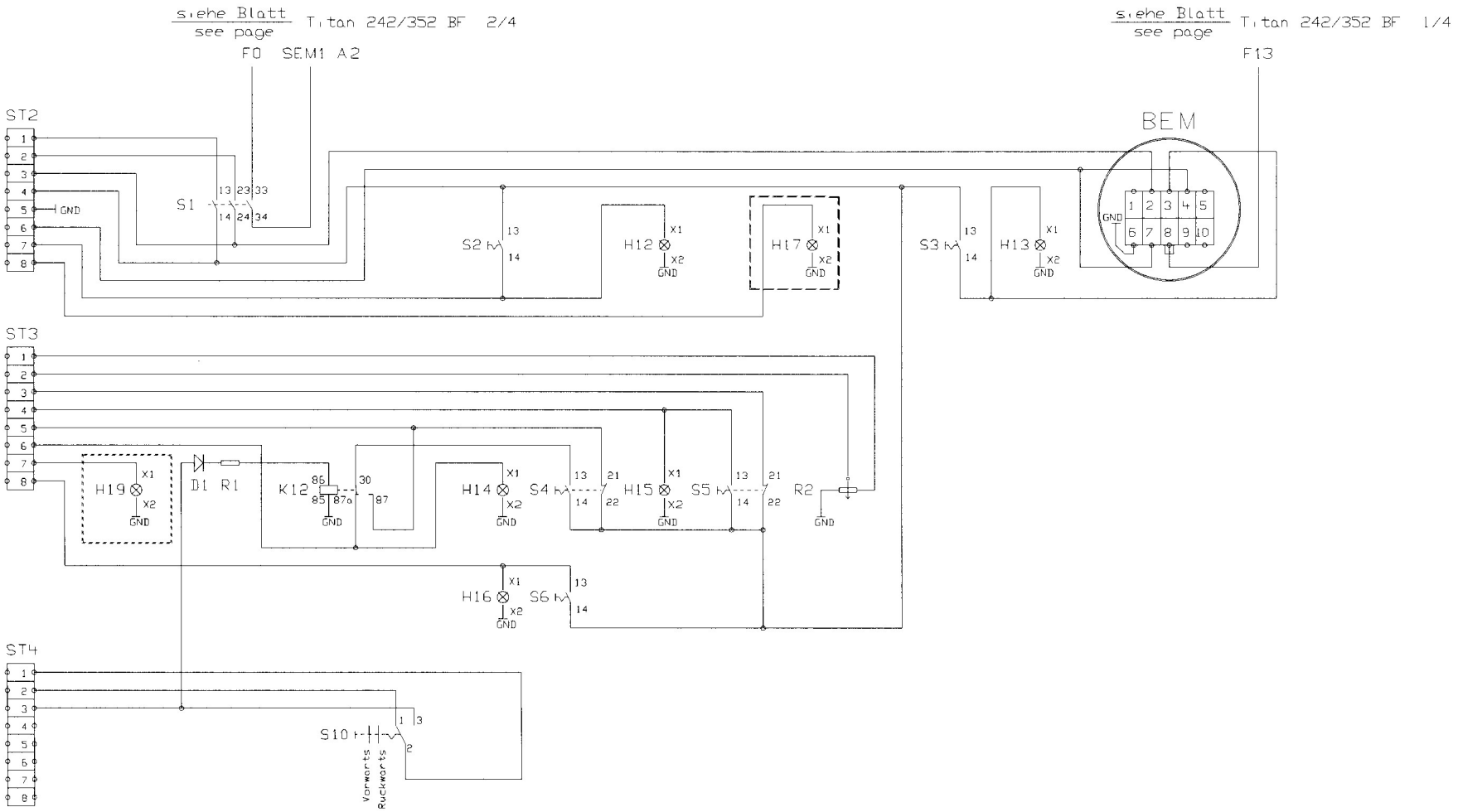

1	Bauser BEM	31.07.00	Ka.	Datum	27.06.2000	Gansow GmbH + Co.KG Maschinenbau	Verdrahtungsplan wiring diagramm Pult / panel	Typ / model Titan 242BF110+E/60bt44 352BF130/90bt52	ab Masch.-Nr./ from masch.no. T242_0145/T242X_0002/T352_0079	Blatt/Page 3/4
				Bearb.	Kampmann				bis Masch.-Nr./ up to masch.no. T242 /T242X /T352	Datum/date 07.2000
				Gepr.						
Zust.	Änderung	Datum	Name	Norm		Urspr. Titan 031				

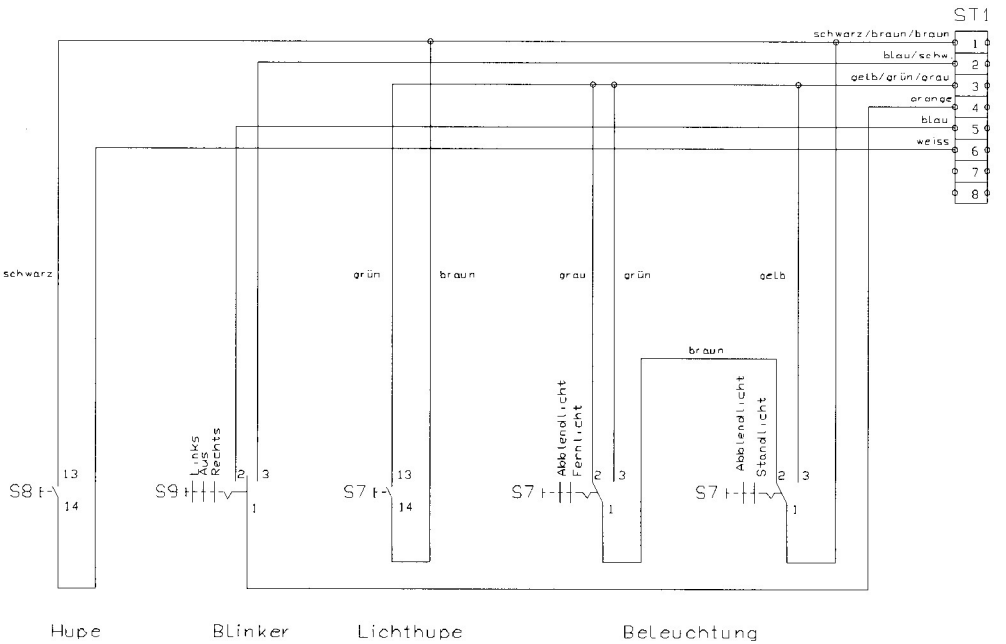

				Datum	27.06.2000	Gansow GmbH + Co.KG Maschinenbau		Verdrahtungsplan wiring diagramm Multischalter / multiswitch	Typ / model Titan 242BF110+E/60bt44 352BF130/90bt52	ab Masch.-Nr./ from masch.no. T242_0137/T242X_0001/T352_0076 bis Masch.-Nr./ up to masch.no. T242..../T242X..../T352....	Blatt/Page 4/4 Datum/date 27.06.2000
				Bearb.	Kompmann						
				Gepr.							
Zust.	Änderung	Datum	Name	Norm		Urspr. Titan.040					

Typ/model Titan 352 BF 130

From/up to machine no. T352F00079/T352F_

K1 = Relay for indicator (06965)
K2 = Relay for, horn (14247)
K3 = Relay to control linear actuator for, squeegee lifting (14247)
K4 = Relay to control linear actuator for, squeegee lowering (14247)
K5 = Relay to control linear actuator for, brush head lifting (14247)
K6 = Relay to control linear actuator for, brush head lowering (14247)
K7 = Contactor for, vacuum motor (06328)
K8 = Contactor for, brush 1 (06328)
K9 = Contactor for, brush 2 (06328)
K10 = Contactor for, brush 3 (06328)
K11 = Contactor for, traction control (14380)
K12 = Relay automatic lifting for, squeegee during reversing (14247)
K13 = Relay for brush stop in case of drive stop

B1,B2 B3 = Thermal contact, brushes
B4 = Thermal contact, traction

M1 = Linear actuator for lifting/lowering squeegee (14279)
M2 = Linear actuator for lifting/lowering brush head (14279)

M3 = Water pump (13963)
M4 = Motor, brush 1 (13965)
M5 = Motor, brush 2 (13965)
M6 = Motor, brush 3 (13965)
M7 = Turbine (13994)
M8 = Traction motor (13979)

F0 = Fuse, traction control, 80 V / 5 A (06882)
F1 = Fuse, 80 V / 7,5 A, controller, 24V (06883)
F2 = Fuse, 80 V / 7,5 A, controller, 48V (06883)
F3 = Fuse, linear actuator for squeegee 80 V / 7,5 A (06883)
F3a = Fuse,linear actuator for brush head 80 V / 7,5 A (06883)
F4 = Fuse, turbine, 80 V / 30 A (06885)
F6 = Fuse, brush 1: 35 A (14079)
F7 = Fuse, brush 2: 35 A (14079)
F8 = Fuse, brush 3: 35 A (14079)
F9 = Fuse, traction, 50 A (12572)
F10 = Safety fuse, 50 A for, control unit 48V and turbine (12572)
F11 = Main fuse, 160 A (12417)
F12 = Fuse, water pump, 2 A mT (13484)
F13 = Fuse, Cadi, 80 V / 3 A (06881)
F15 = Fuse, Buzzer, 250V/1A (Optional)

S1 = Key switch (06811/06312)
S2 = Switch for turbine, ON/OFF (06961/06964)
S3 = Switch for brushes, ON/OFF (06961/06964)
S4 = Switch to control linear actuator for, squeegee, lifting/lowering (06961/06963/06964)
S5 = Switch to control linear actuator for, brush head, lifting/lowering (06961/06963/06964)
S6 = Switch for, rotating beacon, ON/OFF (06961/06964) (Optional)
S7 = Switch for, spot light, ON/OFF (70414)
S8 = Switch for, horn (70414)
S9 = Switch for, blinker, left side/right side (70414)
S10 = Switch for, traction, forward/reverse (70414)
S11 = Limit switch for, squeegee, lowering (06974)
S12 = Limit switch for, squeegee, lifting (06974)
S13 = Limit switch for, brush, lowering (06974)
S14 = Limit switch for, brush, lifting (06974)
S15 = Limit switch for, hand brake indicator (06974)
S16 = Switch for, brake light (06309)
S18 = Safety switch for, drivers seat
S19 = Accelerator pedal (12832)
S23 = Level switch for water (Optional)

H1 = Lamp for indicator front left side (optional)
H2 = Lamp for indicator rear left side, 24 V/10 W (06024)
H3 = Lamp for indicator front right side (optional)
H4 = Lamp for indicator rear right side, 24 V/10 W (06024)
H5 = Lamp for stop light, left side, 24 V/10 W (06024)
H6 = Lamp for stop light, right side, 24 V/10 W (06024)
H7 = Lamp for spotlight, left side, 24 V/10 W (06024)
H8 = Lamp for spotlight, right side, 24 V/10 W (06024)
H9 = Lamp for rear light,left side, 24 V/5 W (06052)
H10 = Lamp for rear light, right side, 24 V/5 W (06052)
H11 = Lamp for rotating beacon (12059) (Optional)
H12 = Indicator light for turbine, ON/OFF (06961)
H13 = Indicator light for brushes, ON/OFF (06961)
H14 = Indicator light for linear actuator control for, squeegee lifting/lowering (06961)
H15 = Indicator light for linear actuator control for, brush head lifting/lowering (06961)
H16 = Indicator light for rotating beacon, ON/OFF (06961) (Optinal)
H17 = Indicator light for hand brake, ON/OFF 352 BF (06962)
H19 = Indicator light for tank - empty (06962) (Optional)

R1 = Resistor, 390 Ohm / 4 W (06978)
R2 = Potentiometer for water pump controller 1 (06154)
R6 = Resistor, 390 Ohm / 4 W (06978)

D = Protection diode, 1N 4007 for solenoid valve (06088)
D1 = Diode, 1N 4007 (06088)
D2-D9 = Protection diode, 1 N 5404 (06160)

C1, C2 = Electrolyte capacitor, 100 µF / 40 V (06067)
C3, C4 = Capacitor, bipolar, 2,2 µF / 400 V (06153)

Platine 1 (PCB 1)= Waterpump controller with integrated turbine protection (41352)
Platine 2 = Power supply unit for acoustic signal (16023) (Optional)

Buzzer = Acoustic signal during reverse motion (70989) (Optinal)

DC/DC Wandler = DC/DC - Converter, 30-60 V IN, 24 V - 8,3 A OUT (06966)

Y1 = Solenoid valve, waterpump, brushes (13144)

Bauser BEM = Computer aided discharge indicator with shut down relay
for brush motors (14486)
SEM-1 = Traction control, 48 V / 200 A (13980)

Hupe = Horn - 24 V / 336 Hz (06284)

ST 1-4 = 8 pin plug (06904/06905/13591/13592)